CERAMICA
REMAS
sanitary ware



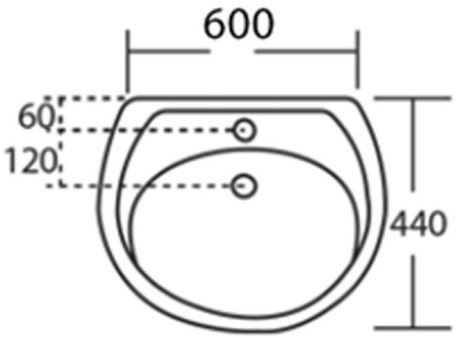

WASHBASIN BEA 60 cm

Weight

Code 230160:

Color White

●

Sanitry ceramics with a glaze surface finish will remain clean and attractive looking for a long time to come .

Suitable products

All drawing contains the necessary measurements which are subject to standard tolerance. They are stated and are non-binding .
Exact measurements , in particular for customized installation scenarios , can only be taken from the finished product .

CERAMICA
REMAS
sanitary ware

