# WR342E

Version:00
Date:260104

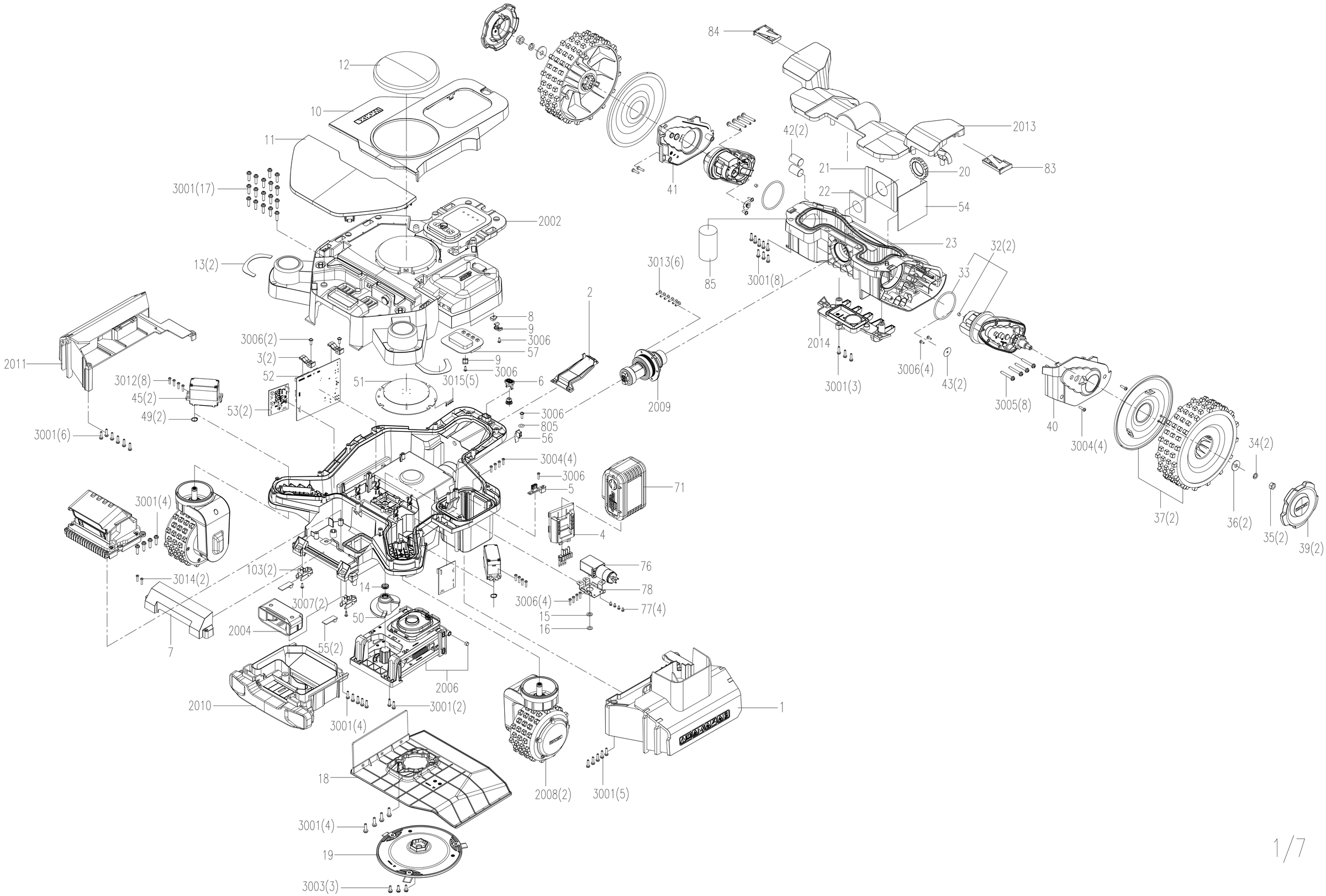

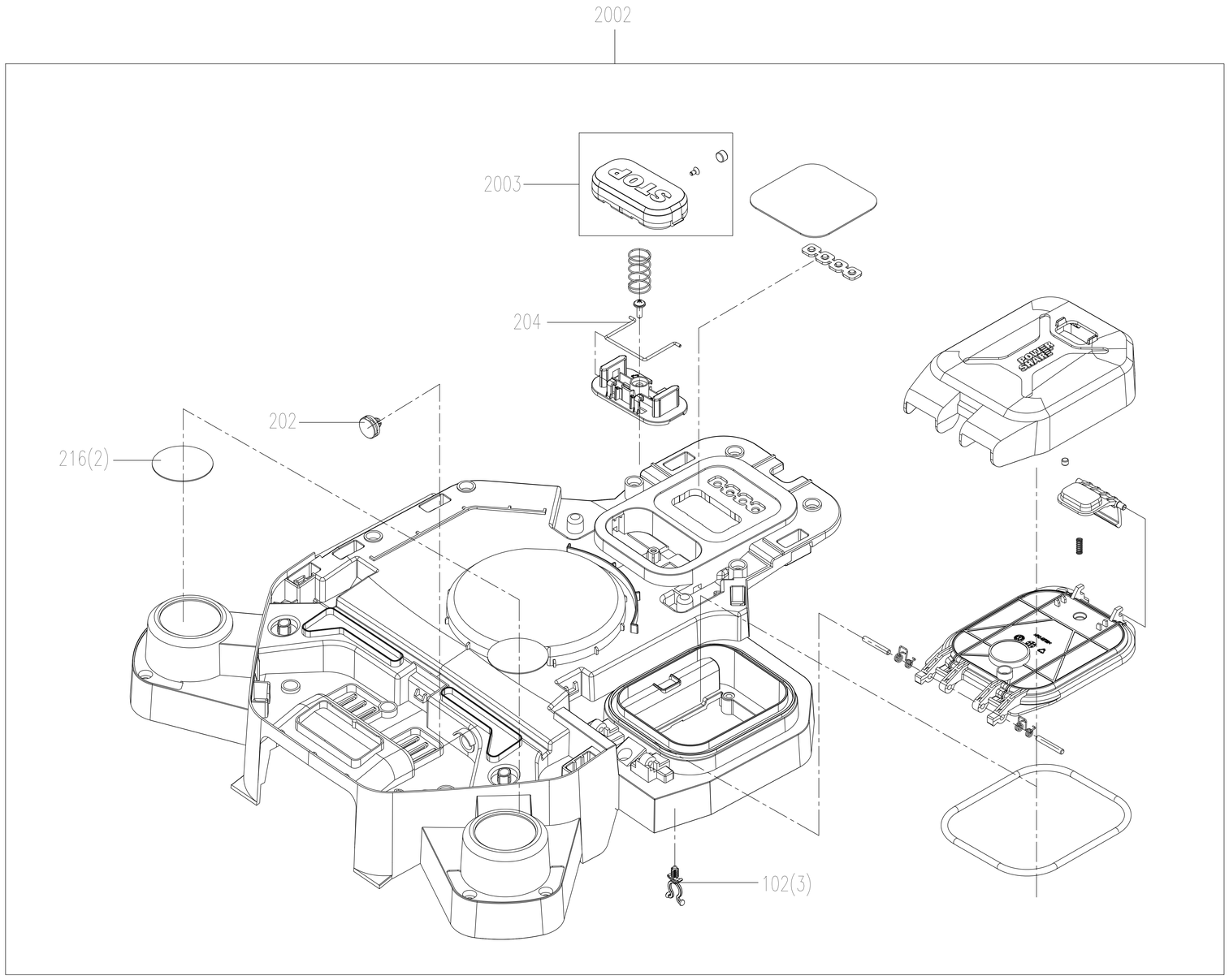
2002
2003
STOP
204
202
216(2)
102(3)

# WR342E

Version:00
Date:260104

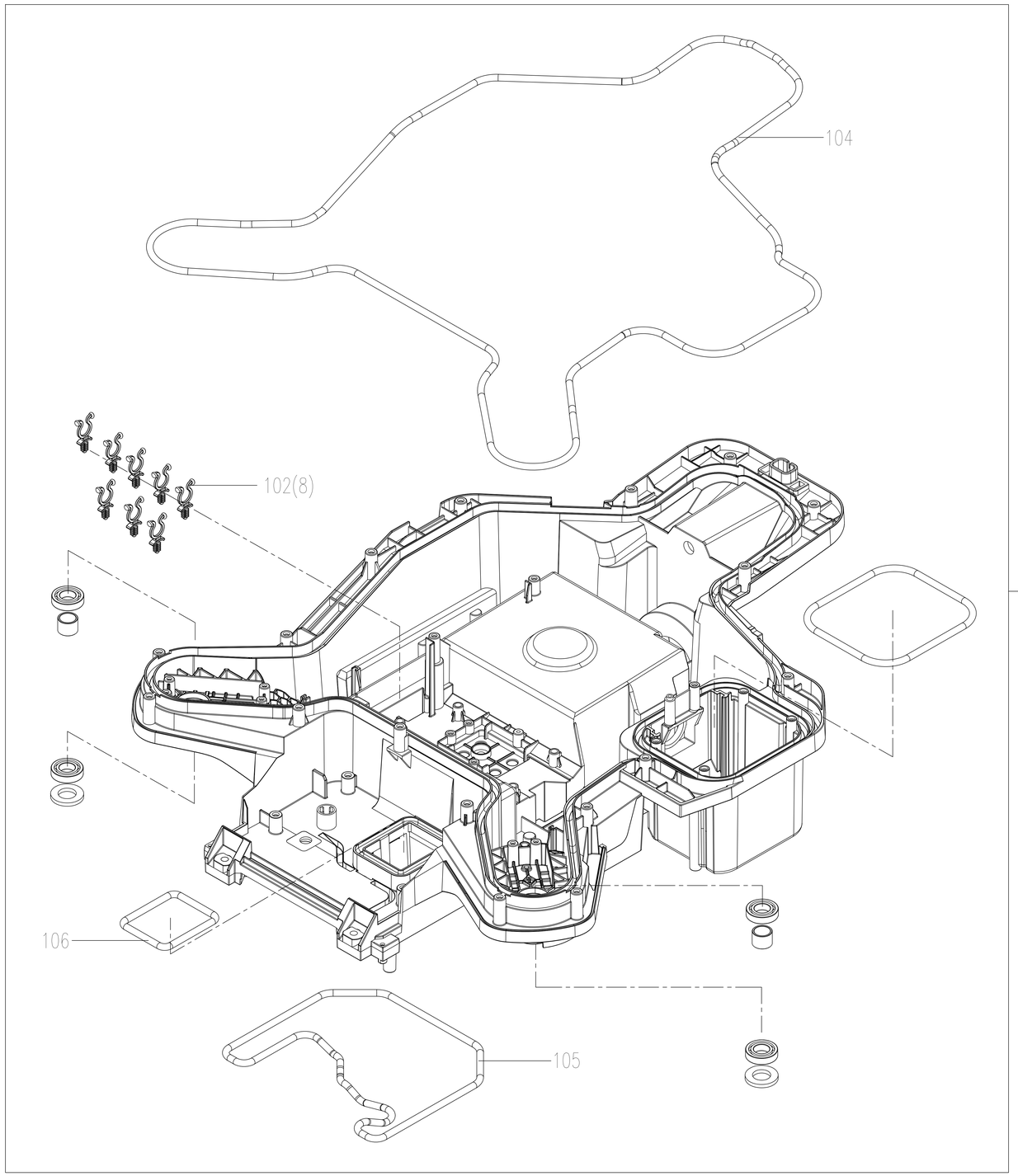


Optional features

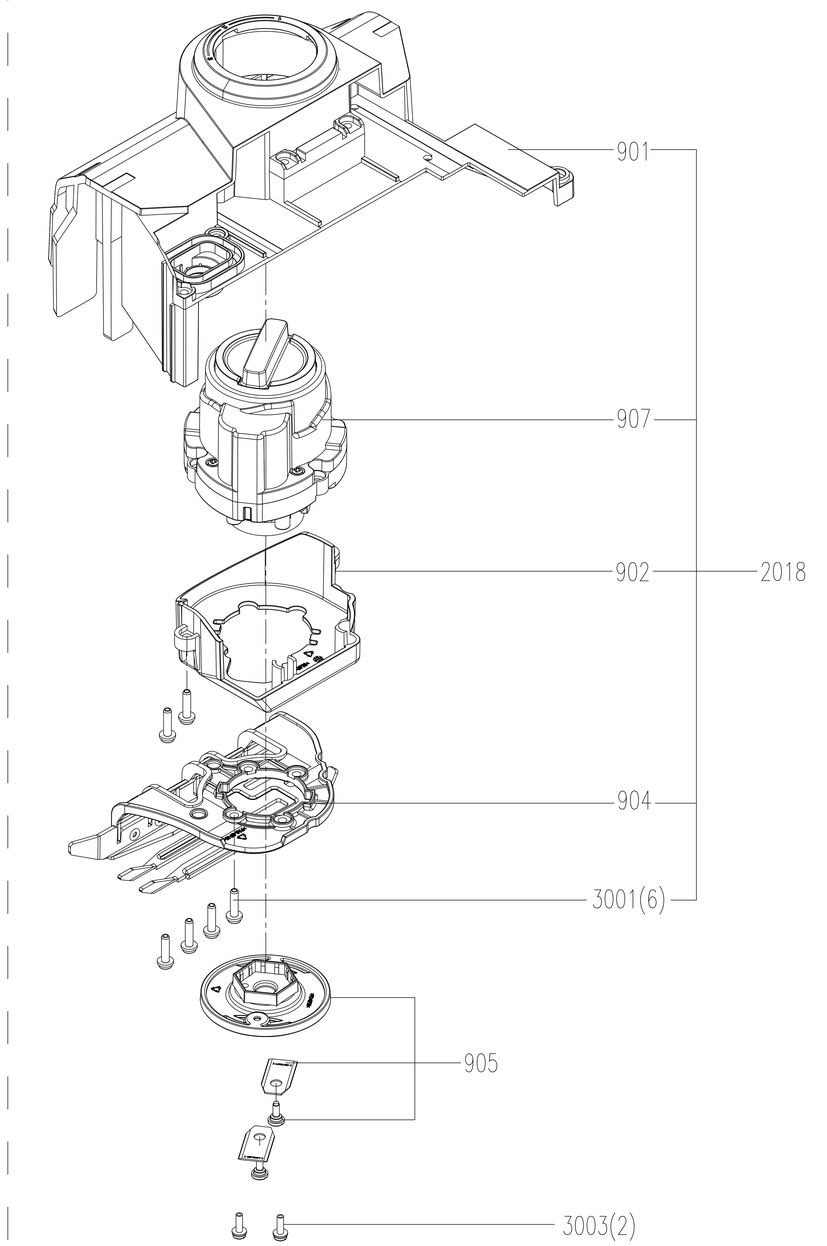

# WR342E

Version:00
Date:260104

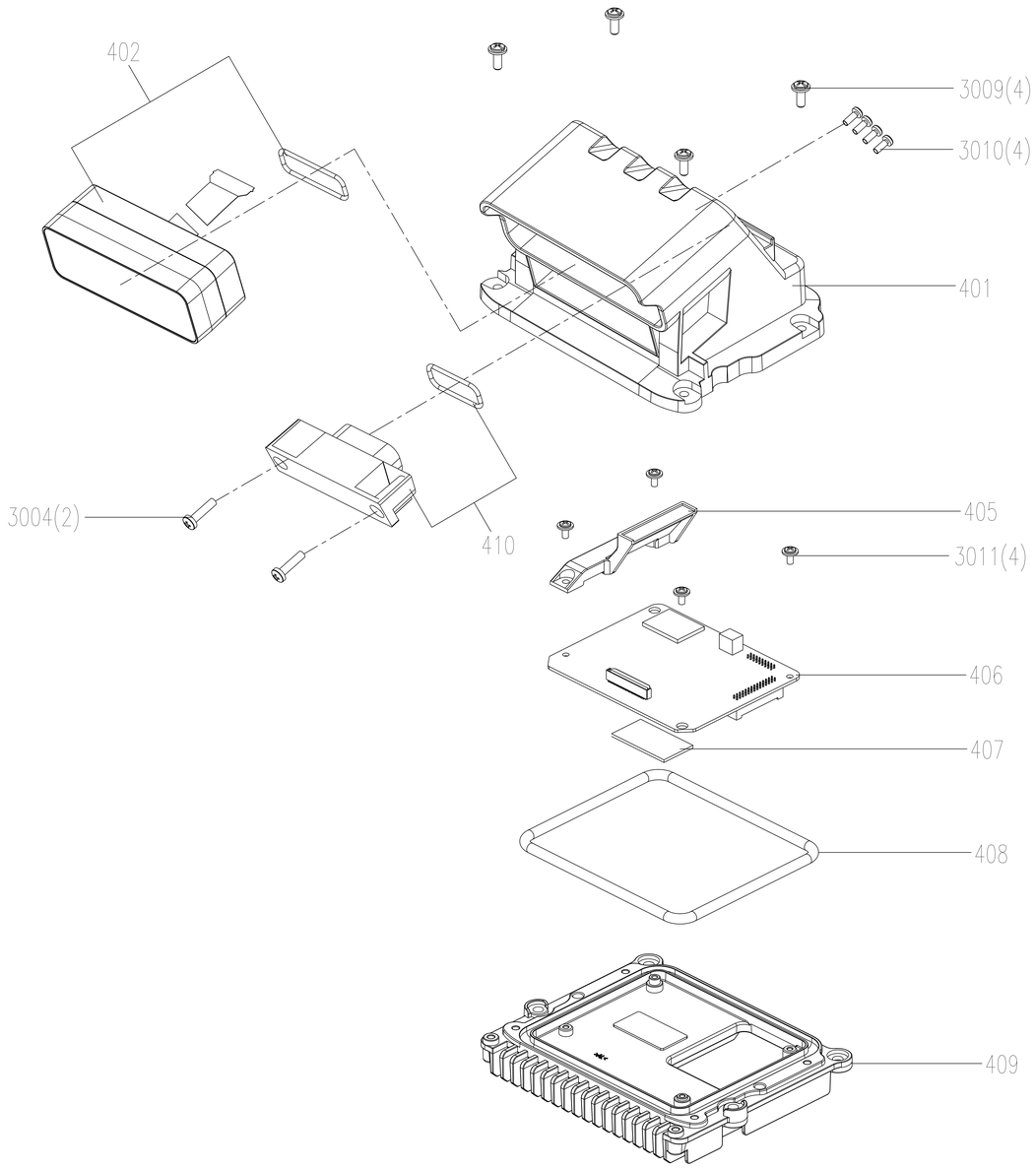


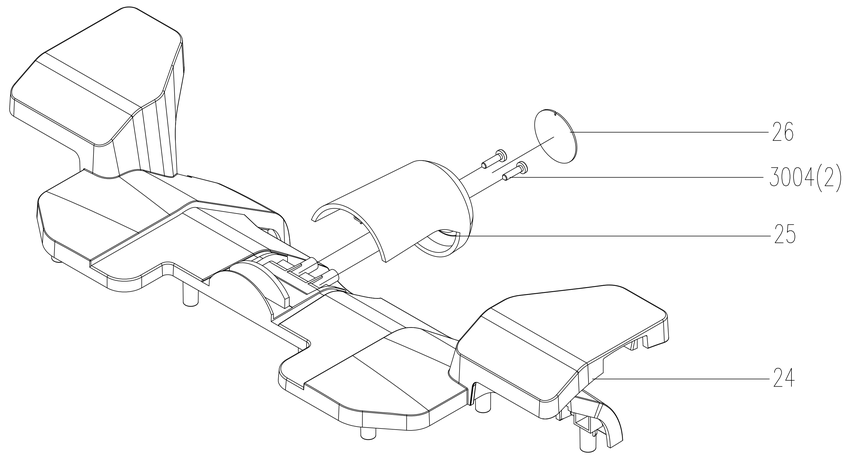


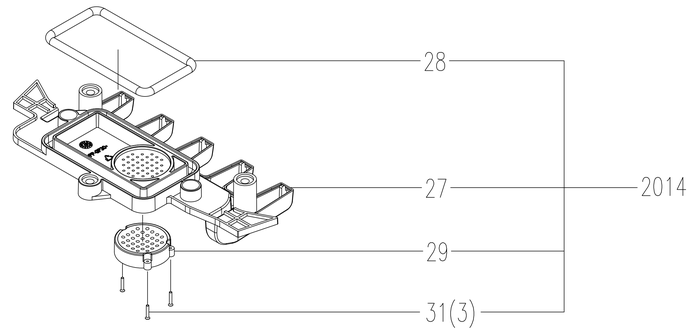


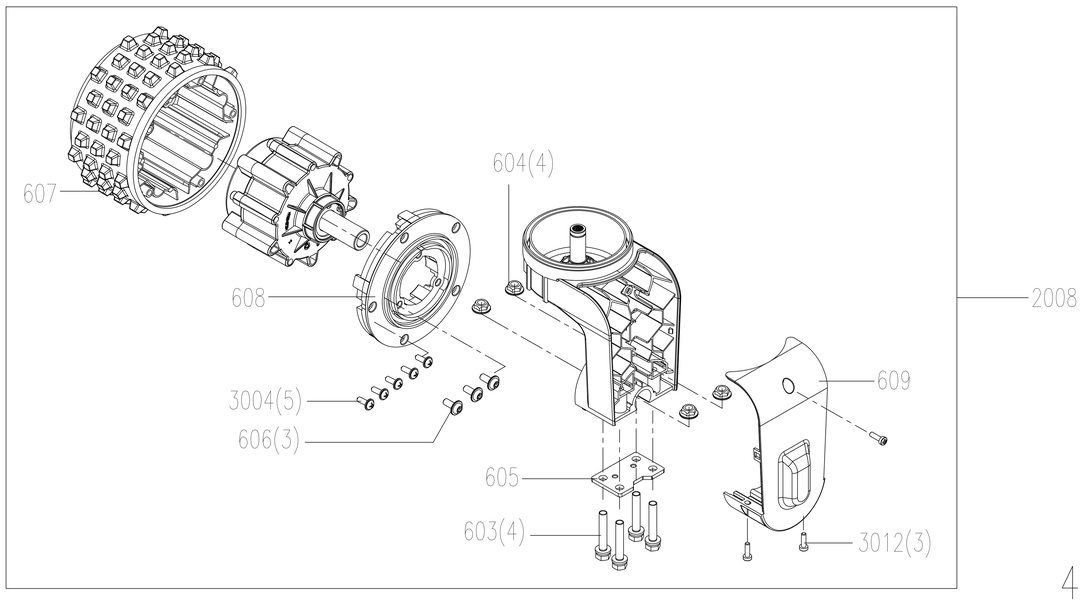

# WR342E

Version:00
Date:260104

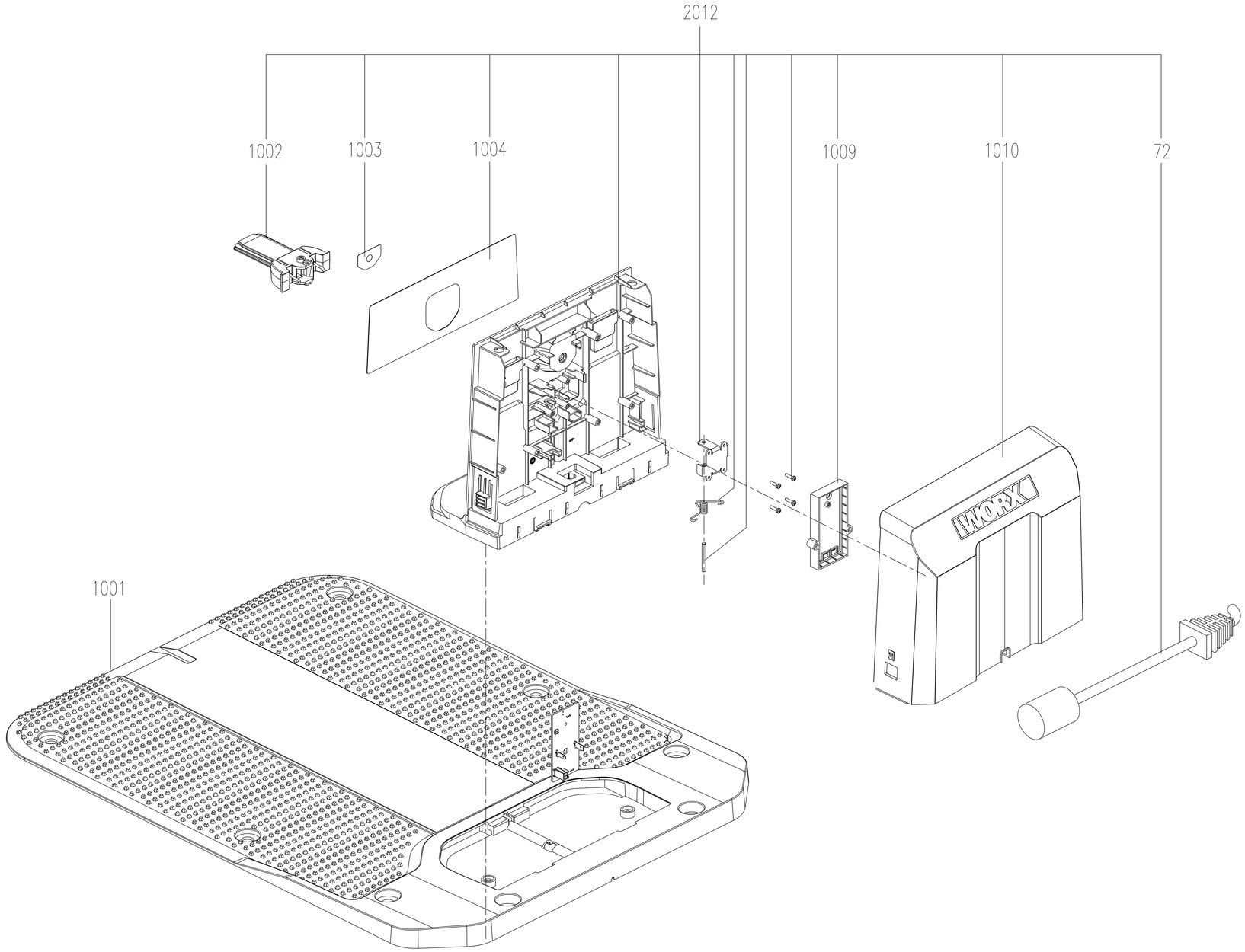

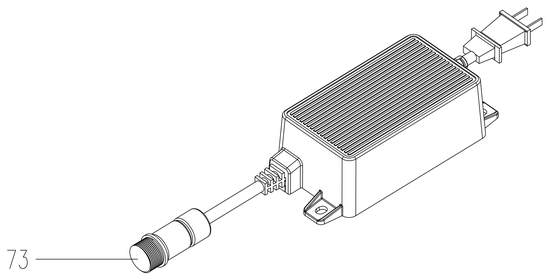
73

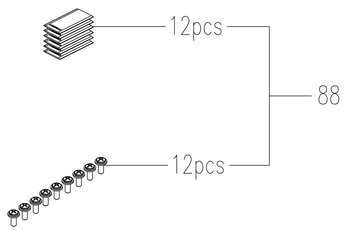
12pcs
88
12pcs

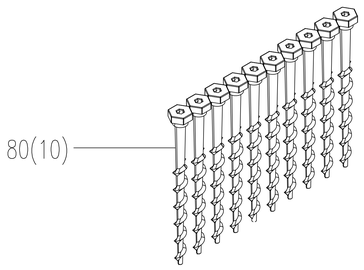
80(10)

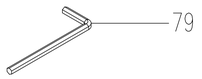
79

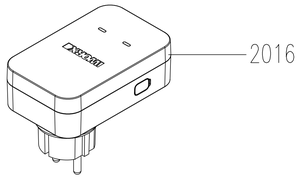
2016

# WR342E

Version:00
Date:260104

