Easy
Recessed

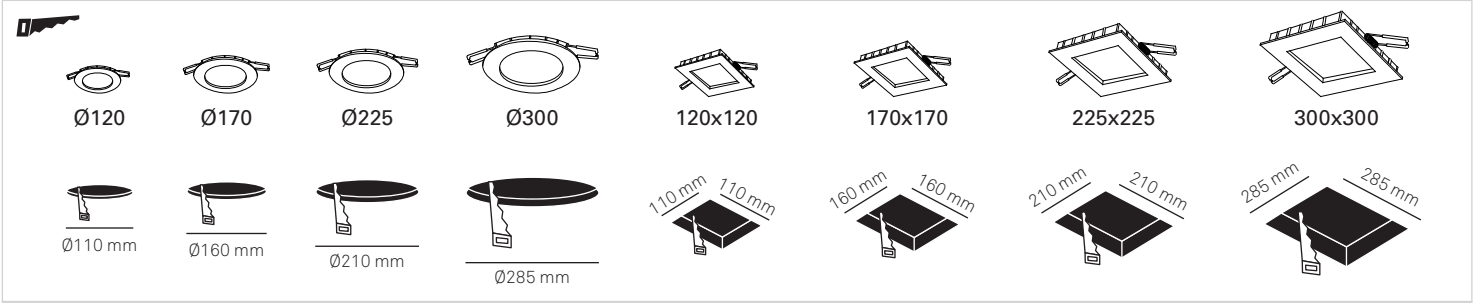

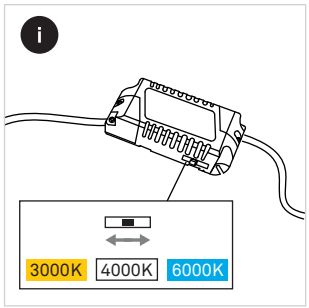

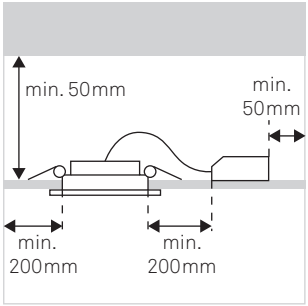

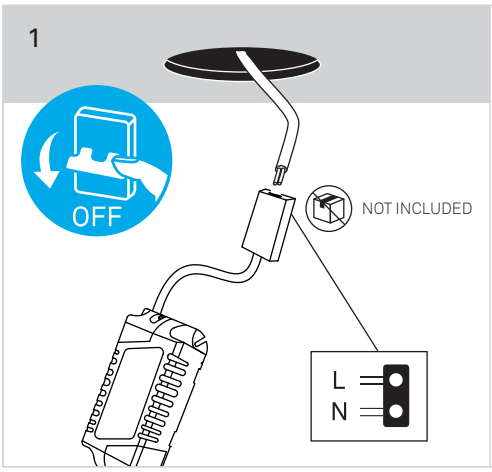

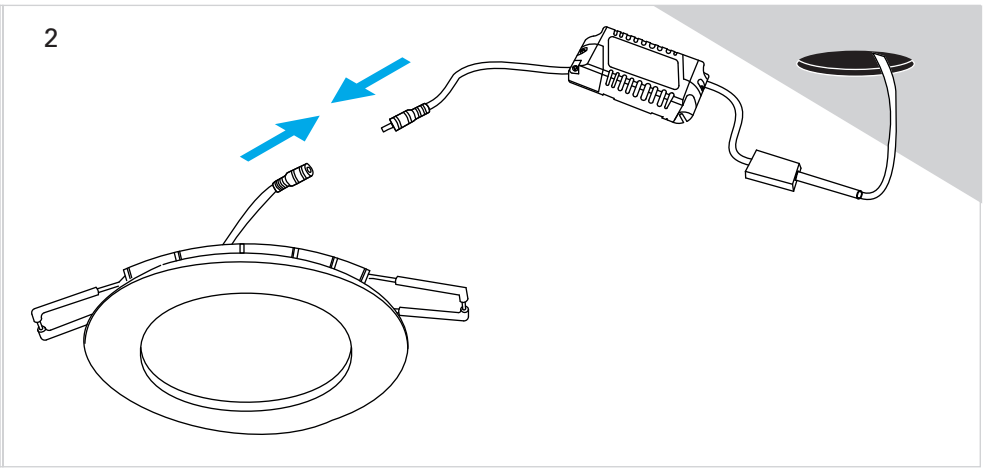

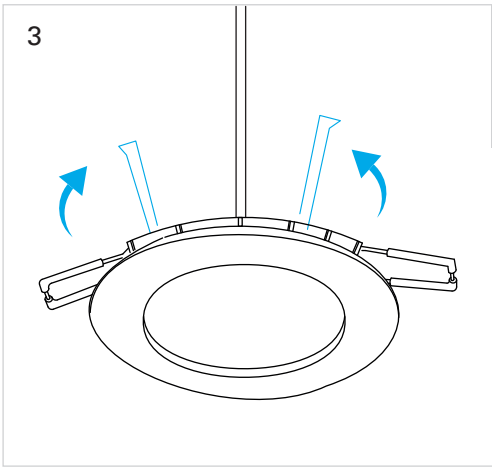

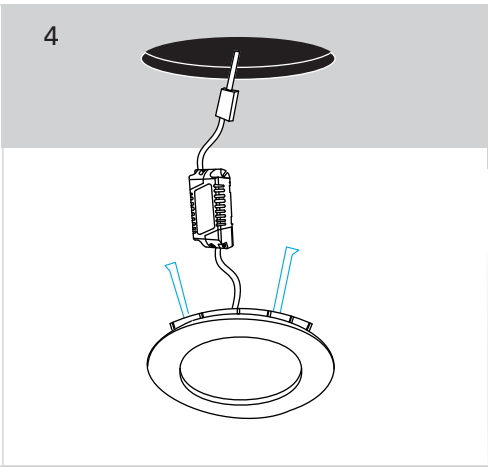

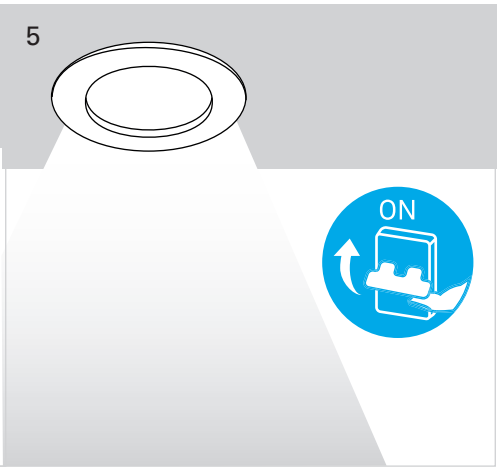

02-10-2023