WG327E.1
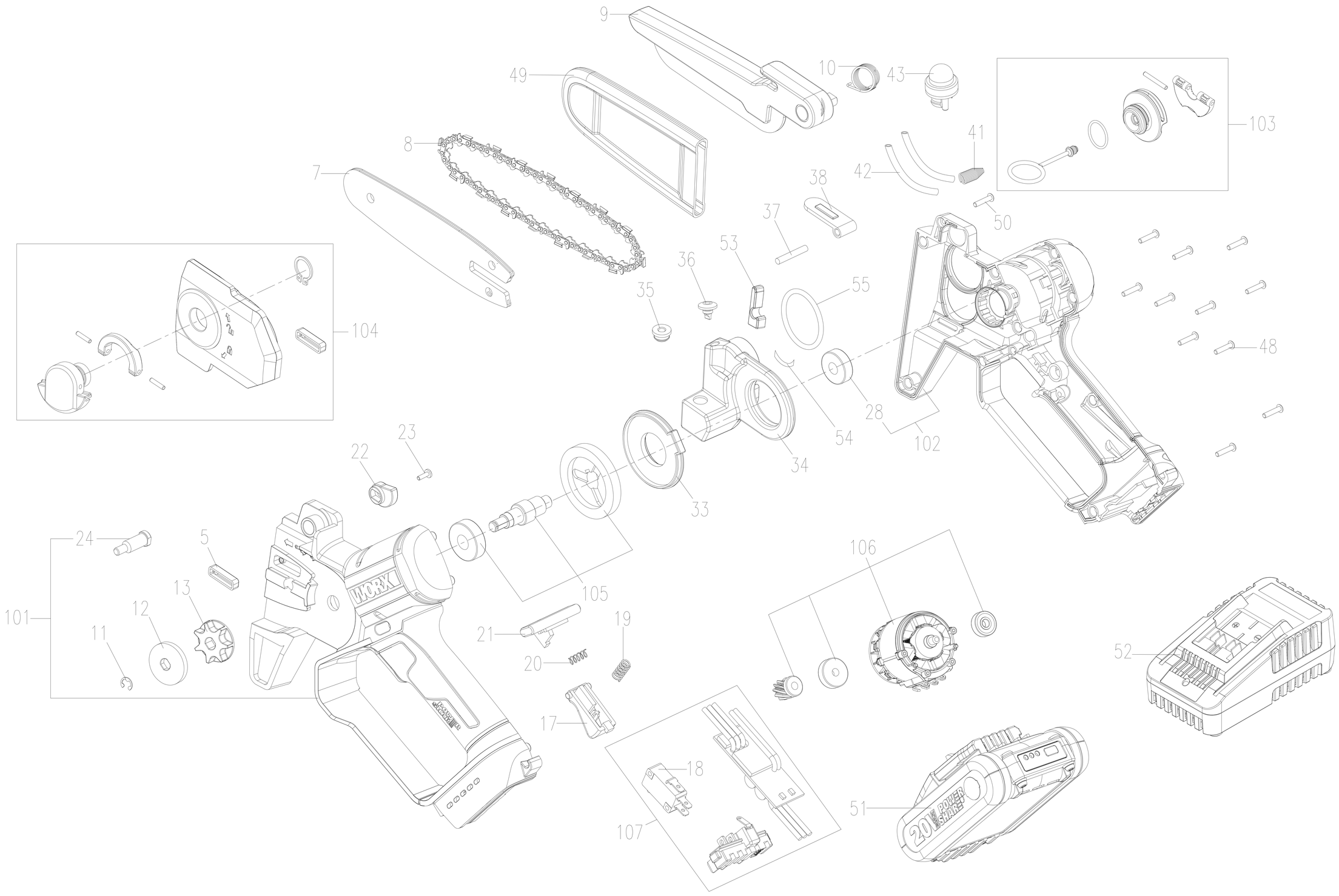
Version:00
Date:260128