9102357 / 9102361

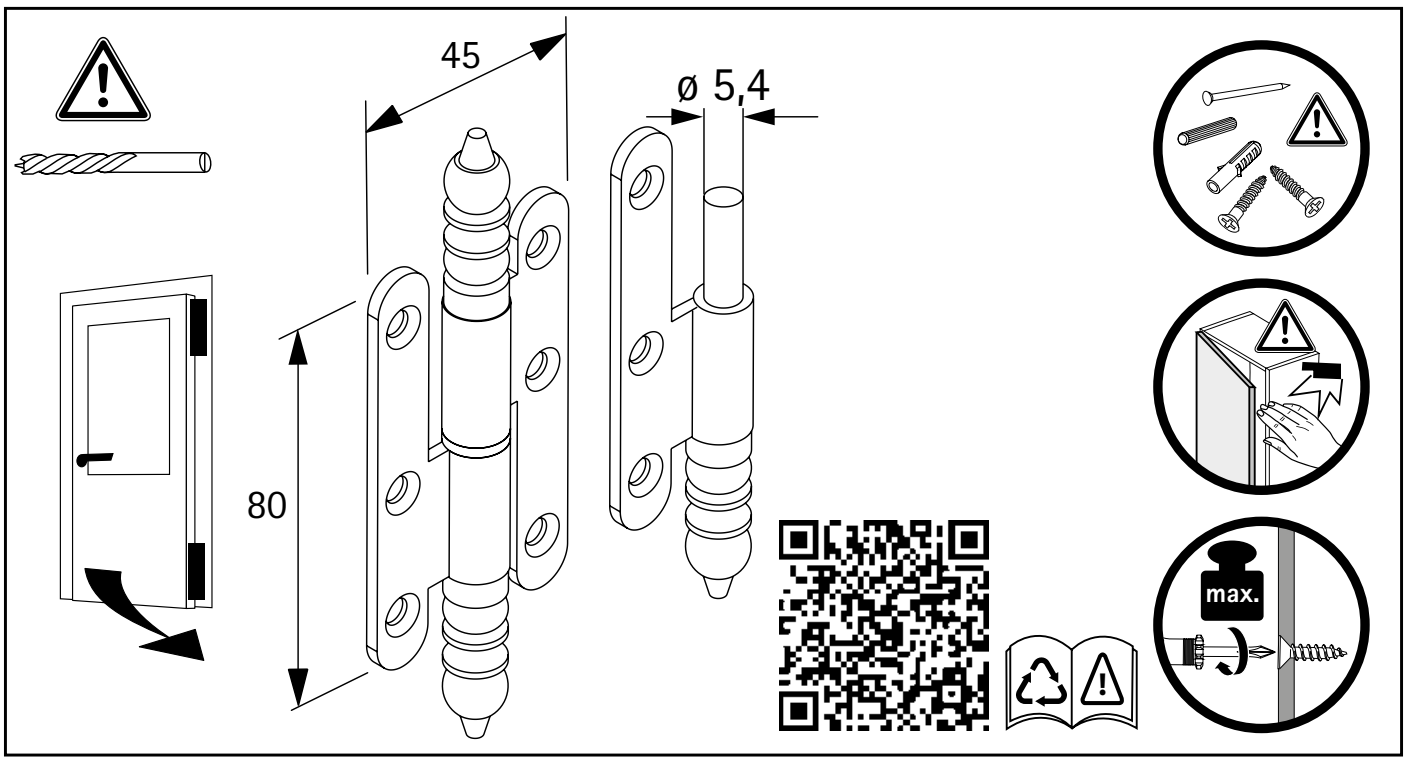

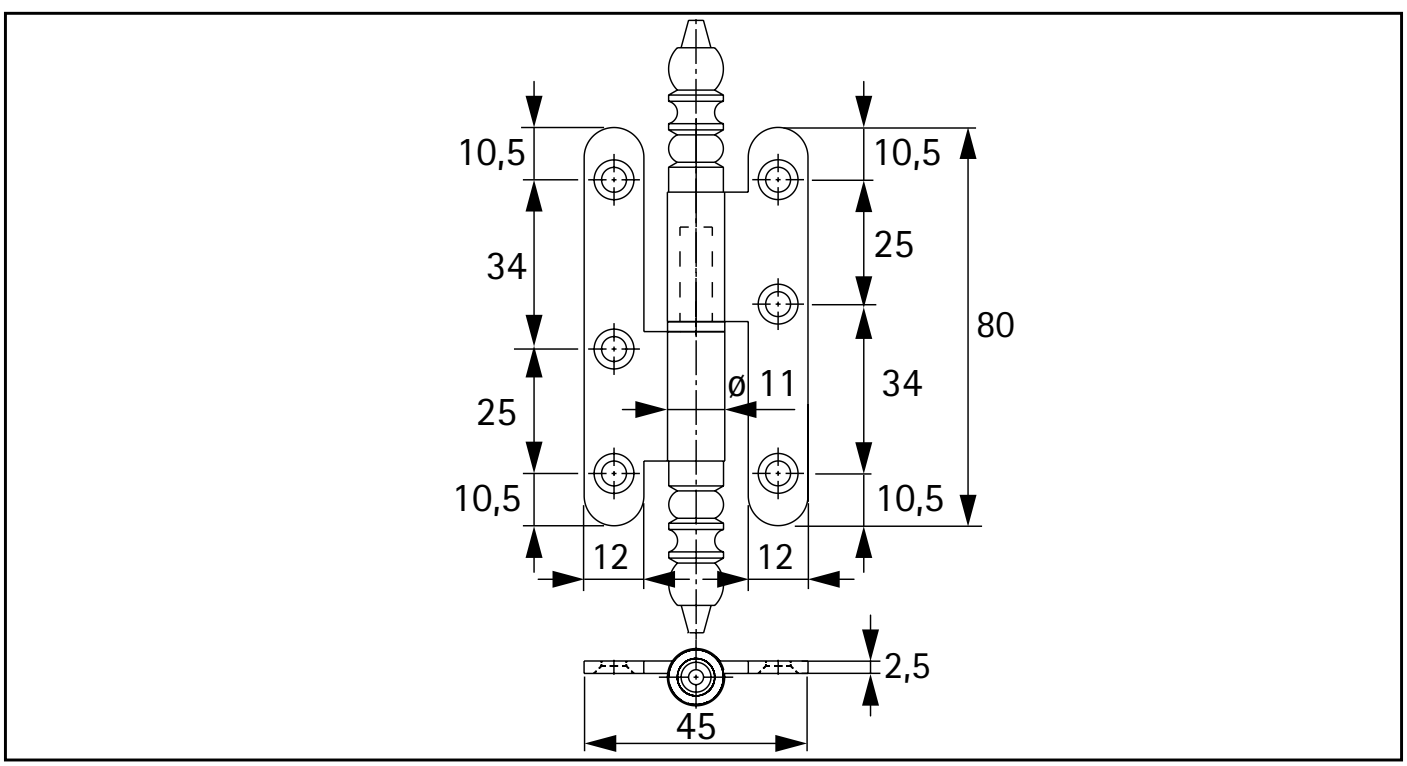

Hettich Do-It-Yourself GmbH & Co. KG
Lange Straße 51
49326 Melle-Neuenkirchen
Germany
diy@hettich.com
www.hettich-diy.com

FR

Al Azul

22
PAP

IMPROFIX
Improve it. Make it. Fix it.

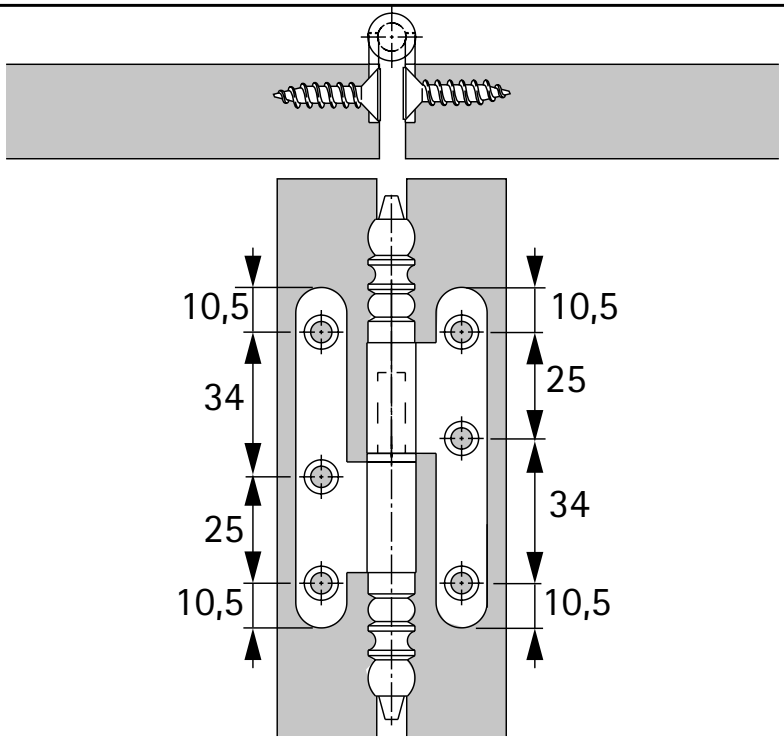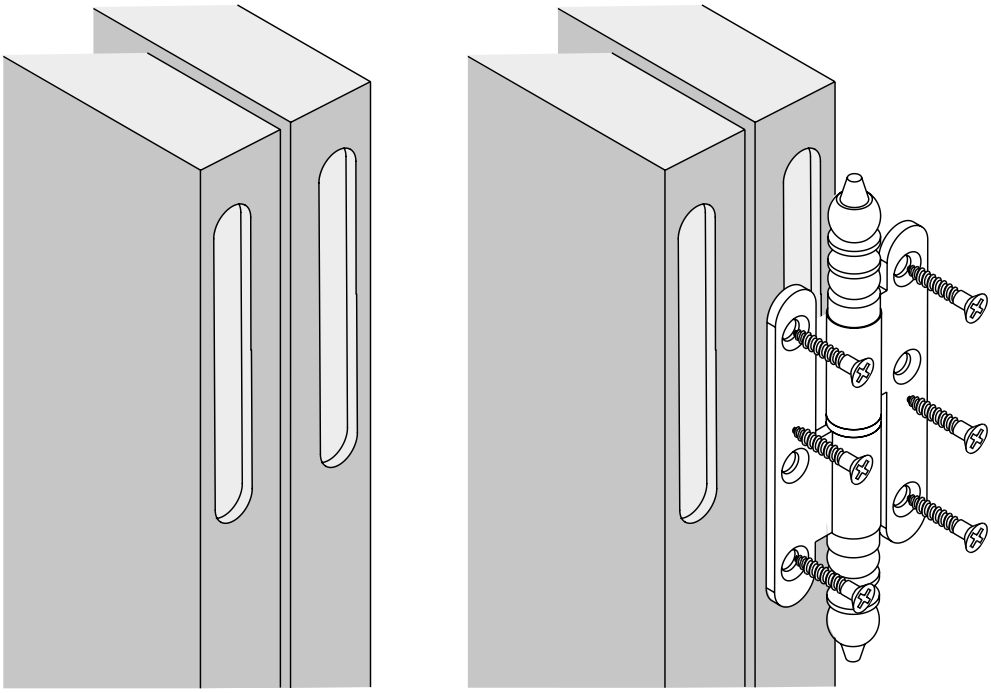
10,5
34
25
10,5
10,5
25
34
10,5