OS2001-2A-2,OS2001-2B-2 product Exploded view

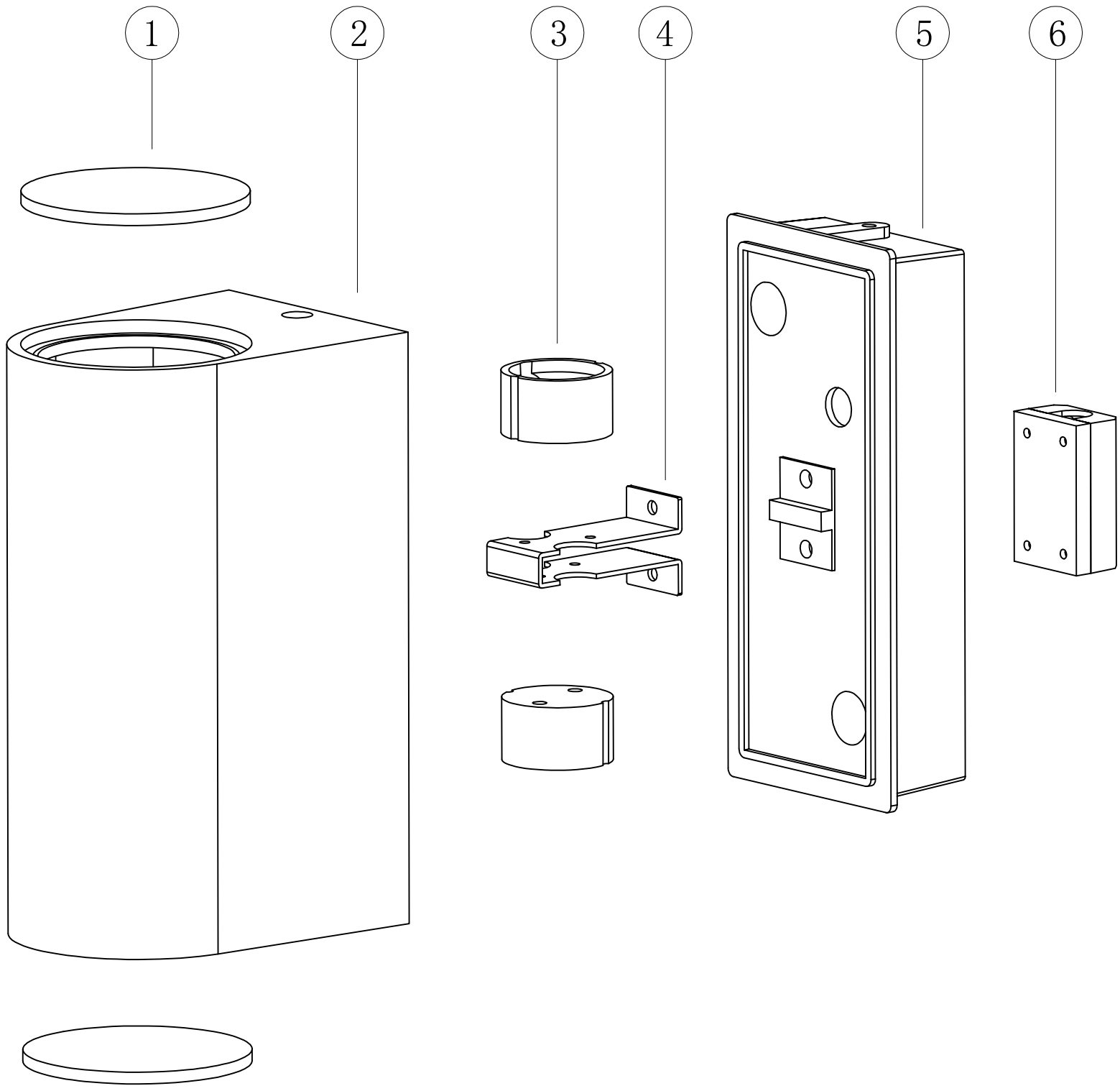

Compo N°	Name	Material Type	Number
1	Glass	Glass	2
2	Cover	Aluminium	1
3	GU10 Lampholder	Ceramics	2
4	Bracket	Iron	1
5	Base	plastic	1
6	Terminal block box	ABS	1