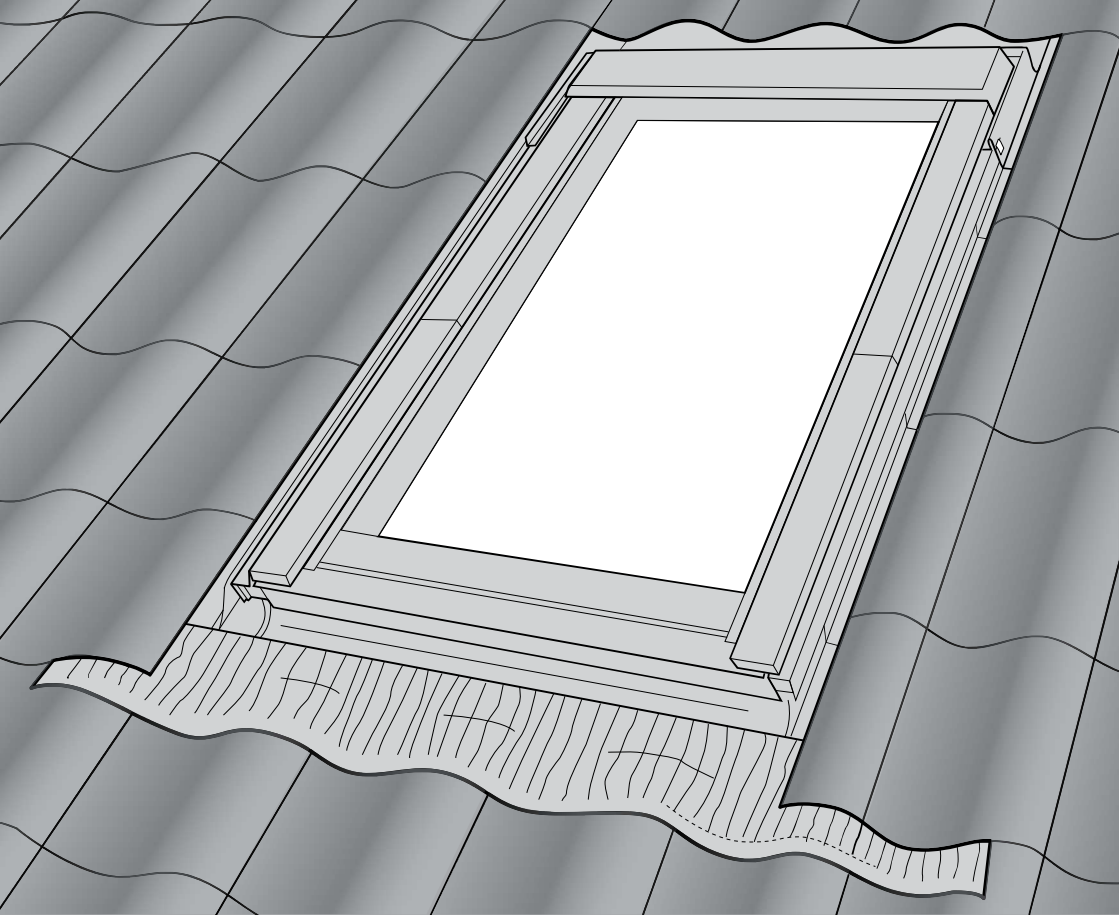

ROOF WINDOW

FR Fenêtre de toit • **DE** Dachfenster • **DK** Ovenlysvindue
NL Dakvenster • **IT** Finestra per tetti • **HU** Tetőtéri ablak
SK Strešné okná • **PL** Okno dachowe • **RO** Ferestre de mansarda
CZ Střešní okna • **SI** Strešno okno • **HR** Krovni prozor





SFX
15-90°



TFX
15-90°



UFX
15-90°

INS-RW 405008

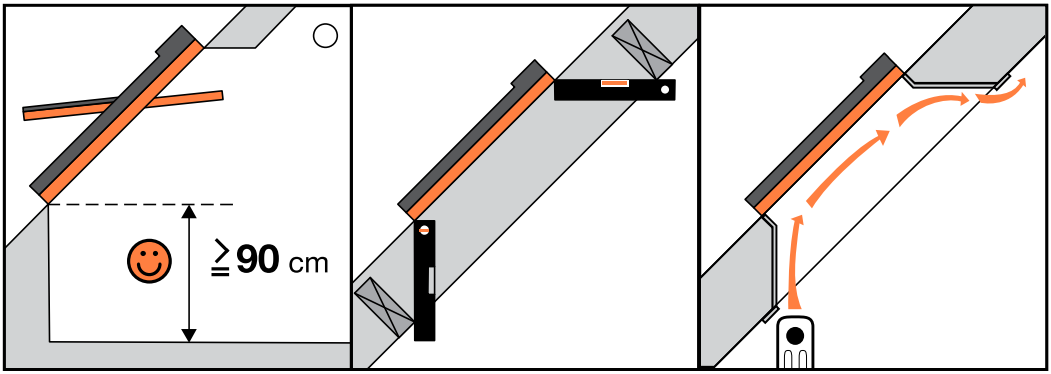

1

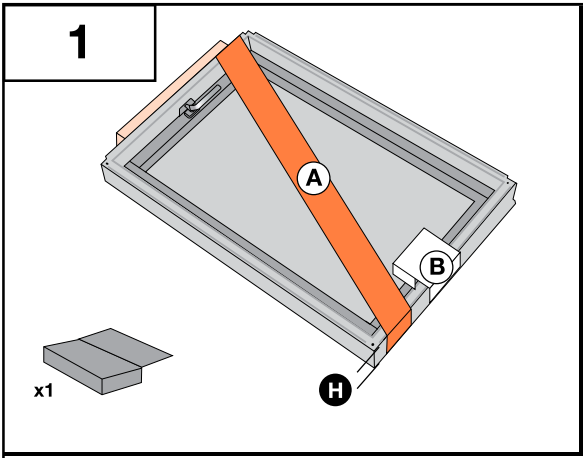

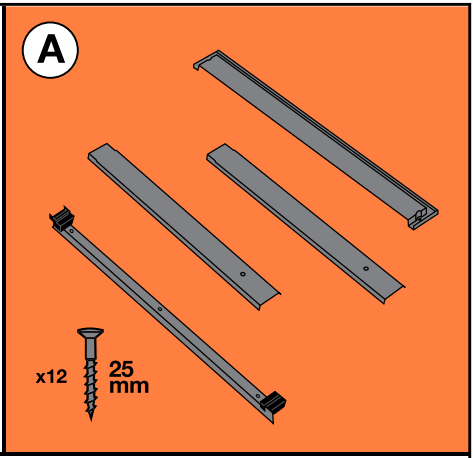

B		30 mm			
PVC	**x4:** C2A (55x78), C4A (55x98), F4A (66x98), F6A (66x118), M4A (78x98), M6A (78x118) **x5:** P6A (92x118), S6A (114x118) **x6:** M8A (78x140), M10A (78x160) **x7:** P8A (94x140)	x18	x16	x1	–
	x4: C2A (55x78), C4A (55x98), F4A (66x98), F6A(66x118), M4A (78x98), M6A (78x118) **x5:** P6A (92x118), S6A (114x118) **x6:** M8A (78x140), M10A (78x160) **x7:** P8A (94x140), S8A (114x140)	**x18:** C2A (55x78), C4A (55x98), F4A (66x98), F6A (66x118), M4A (78x98), M6A (78x118) **x27:** M8A (78x140), M10A (78x160), P6A (92x118), S6A (114x118) **x36:** P8A (94x140), S8A (114x140)	–	x1	H = 120 mm – H = 91 mm x1

2



FCX | FTX | LSX | SCX | SSC | SSX | TFP | UCX

3

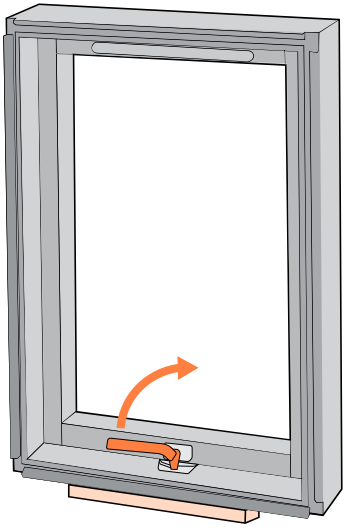

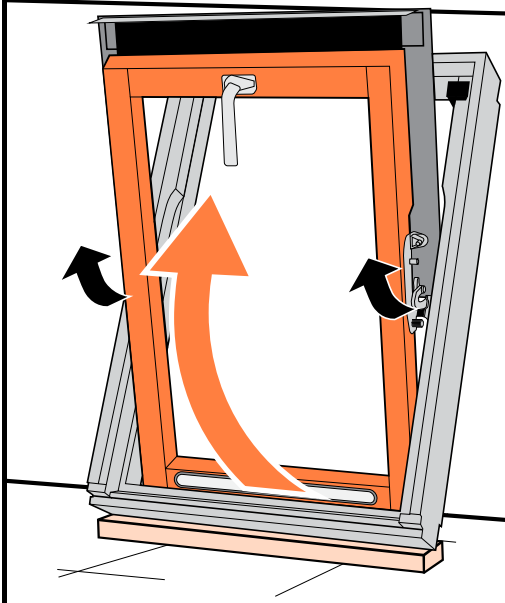

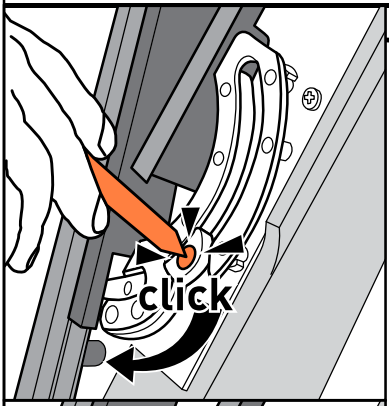

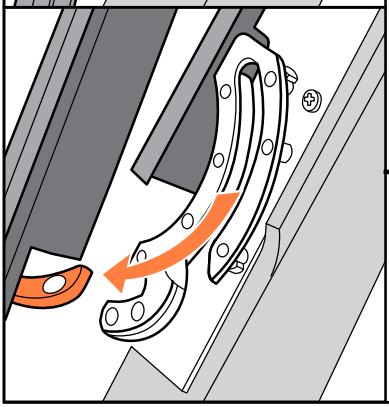

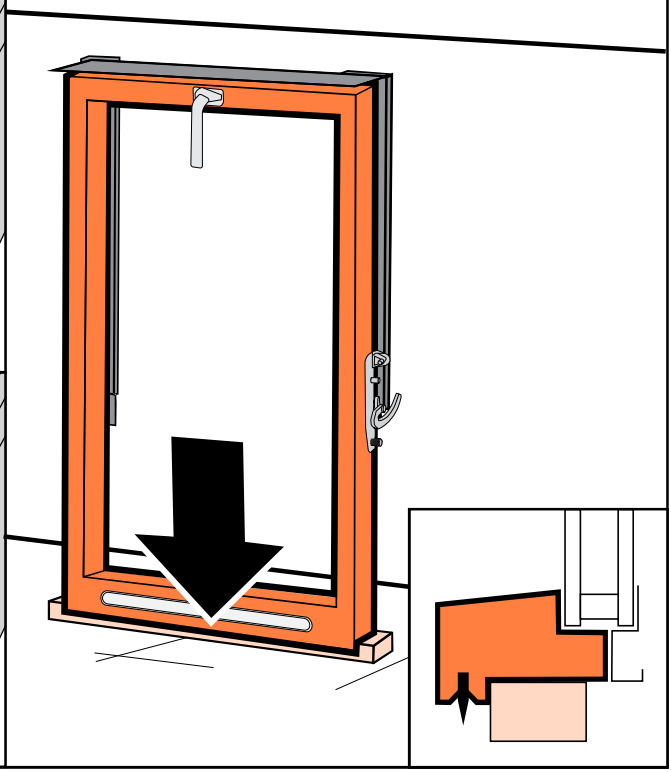

4

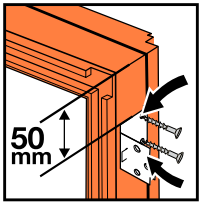

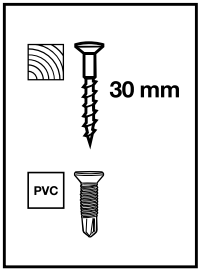

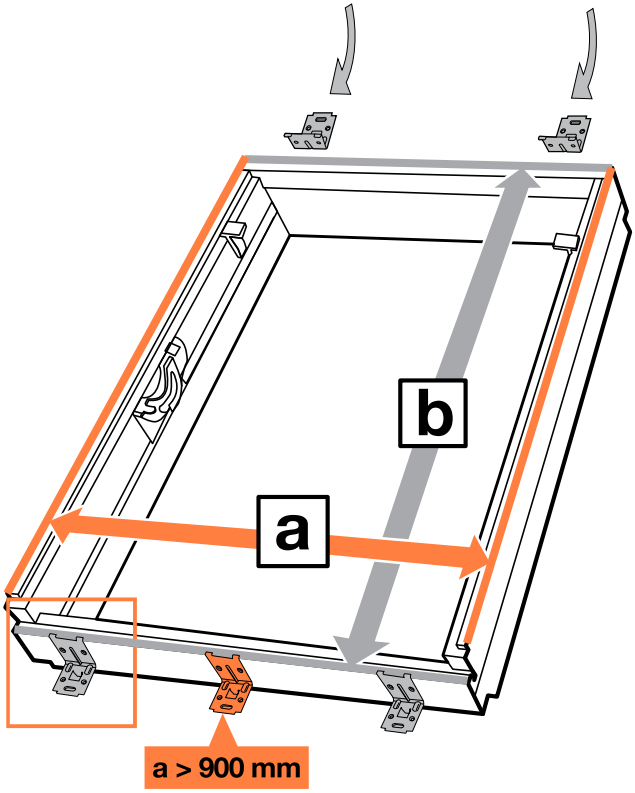

5

IFC

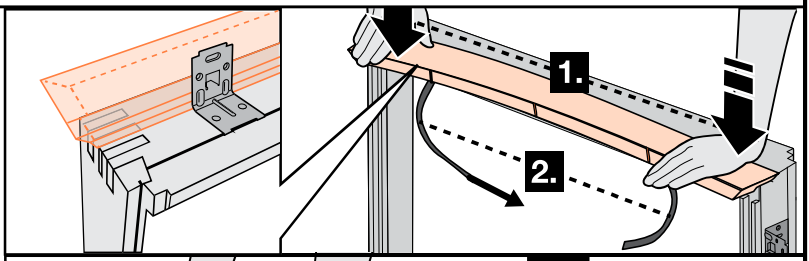

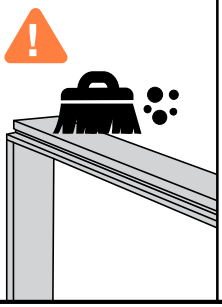

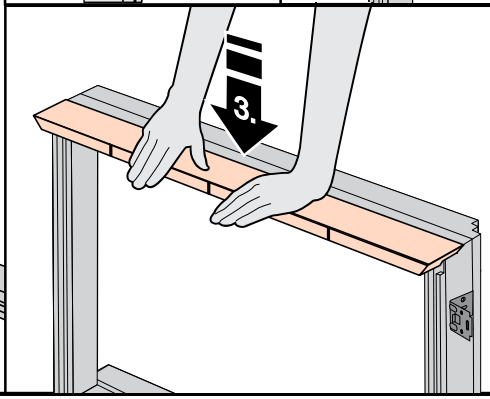

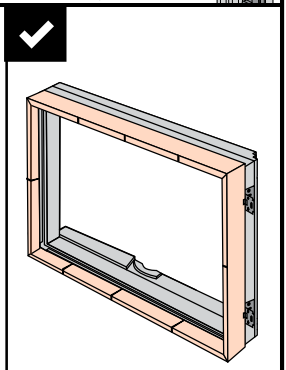

6a

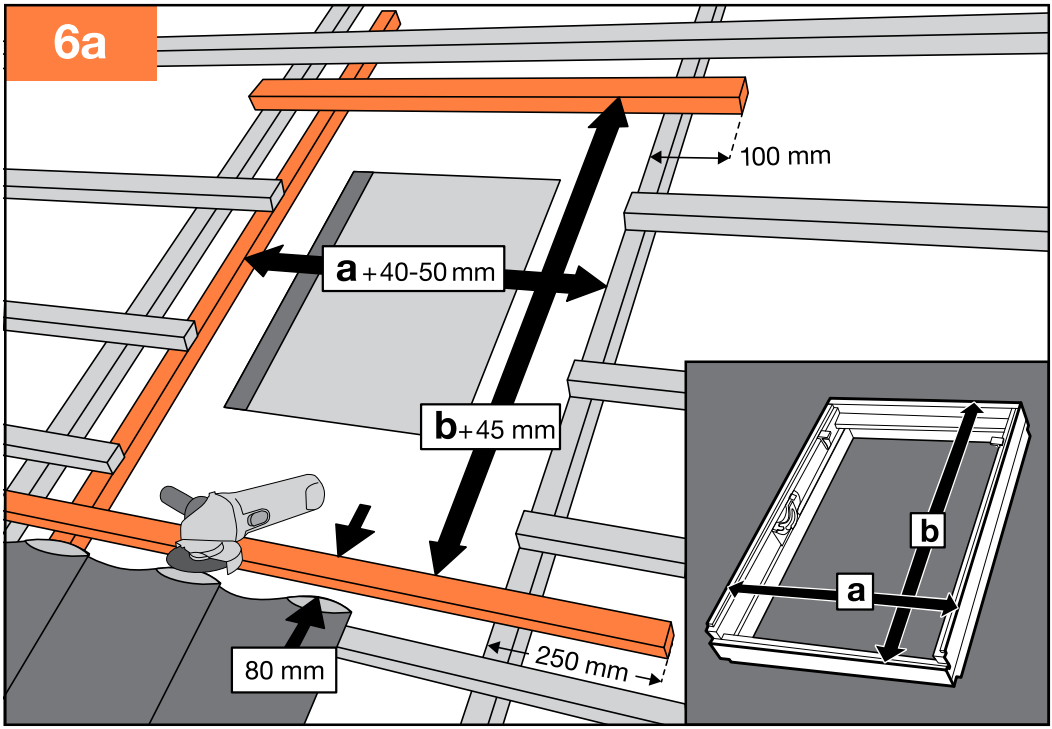
100 mm
a +40-50 mm
b +45 mm
80 mm
250 mm
b
a

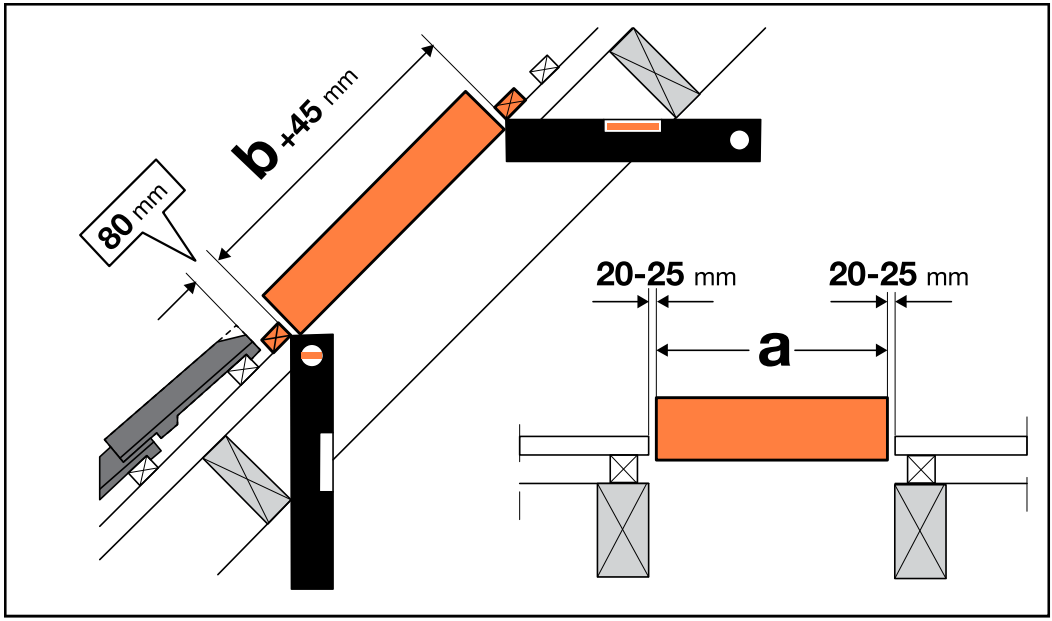
b +45 mm
80 mm
20-25 mm
20-25 mm
a

6b

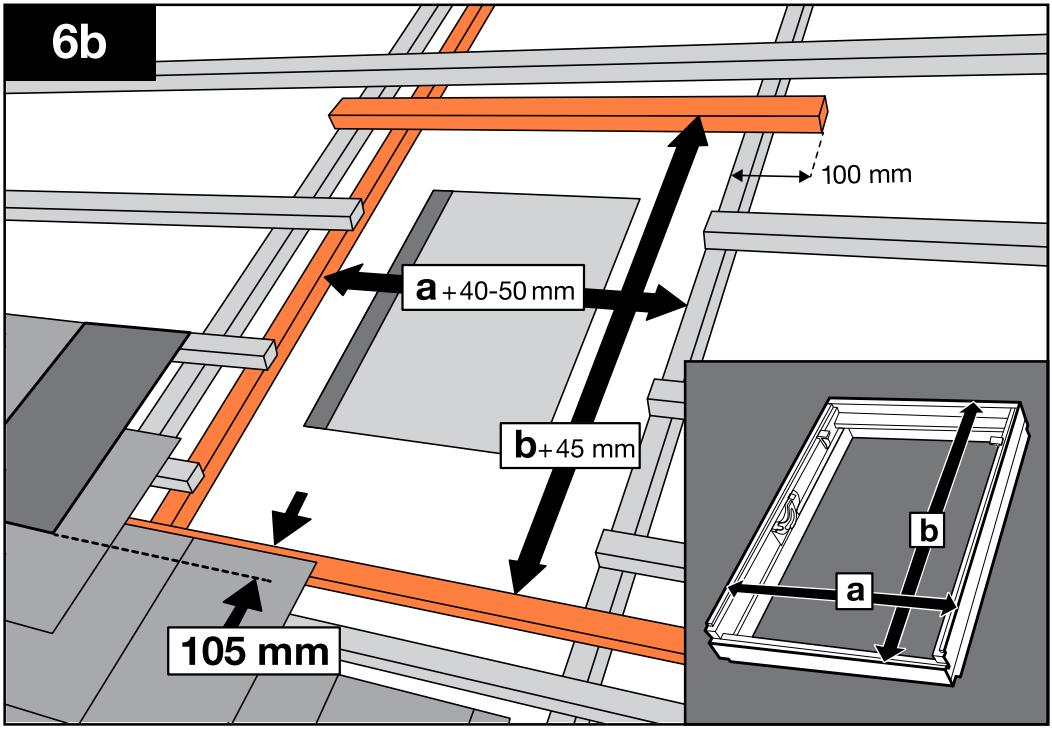

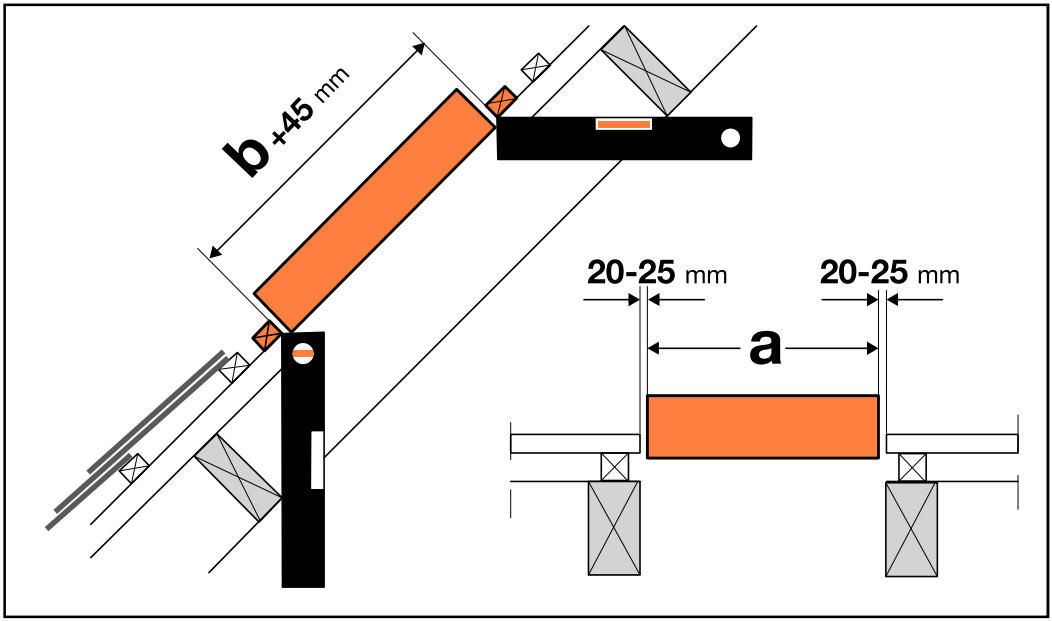

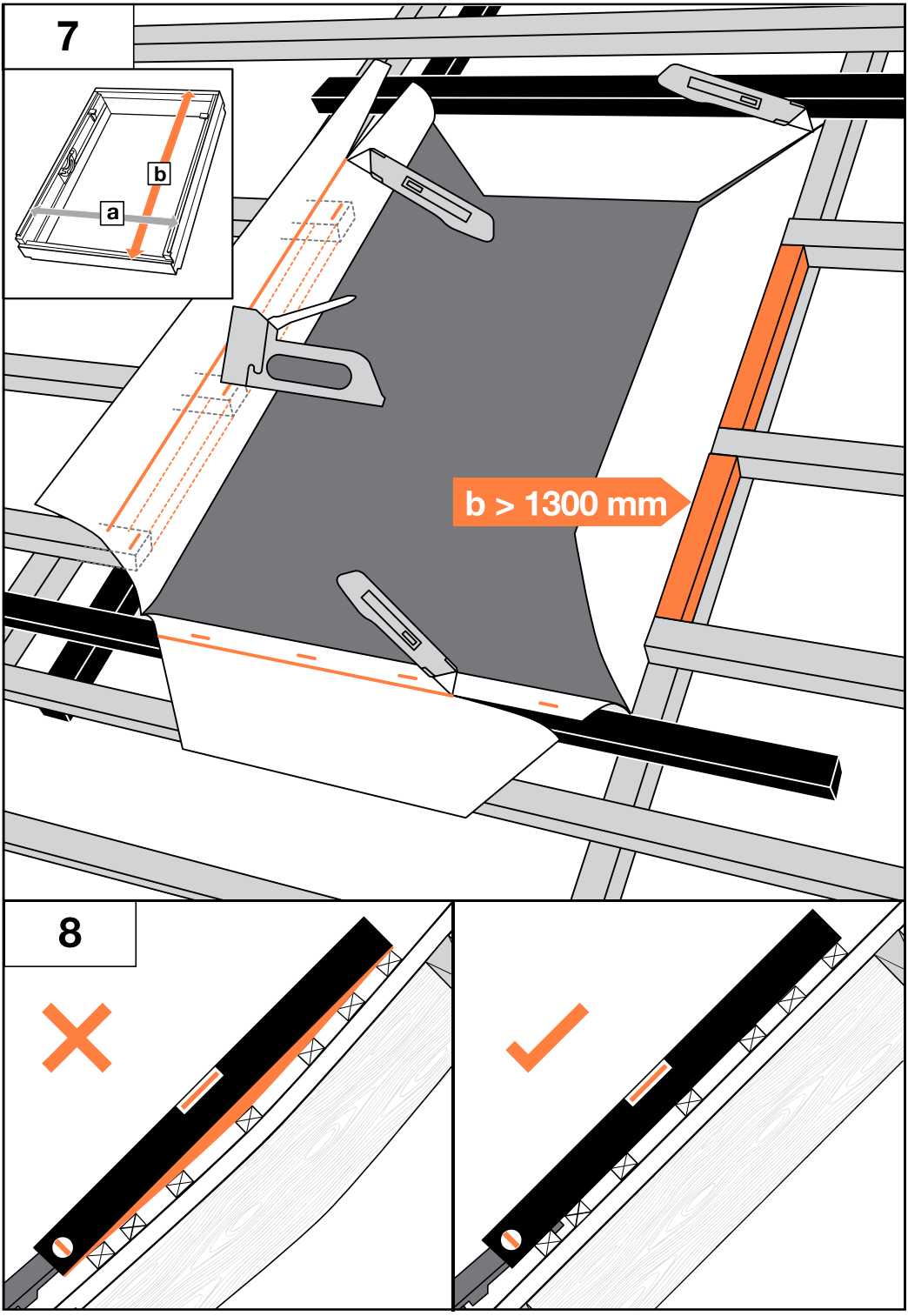
7
b
a
b > 1300 mm
8

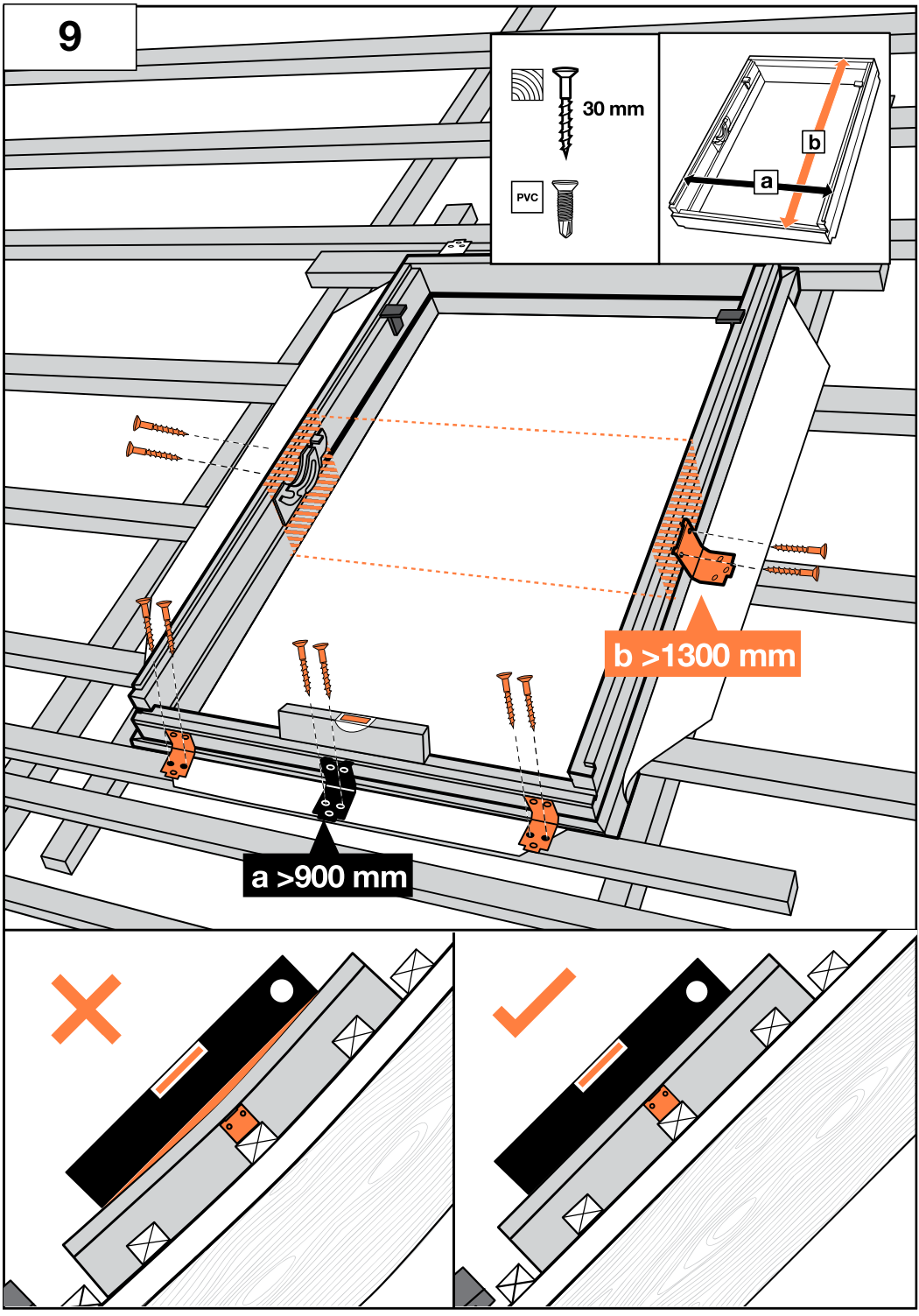
9
30 mm
PVC
b
a
b >1300 mm
a >900 mm

10

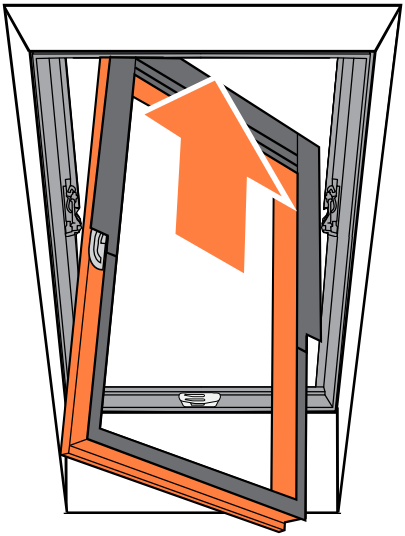

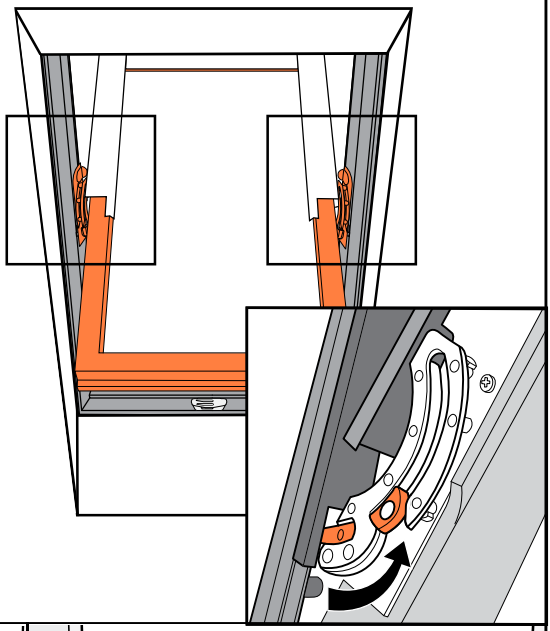

11

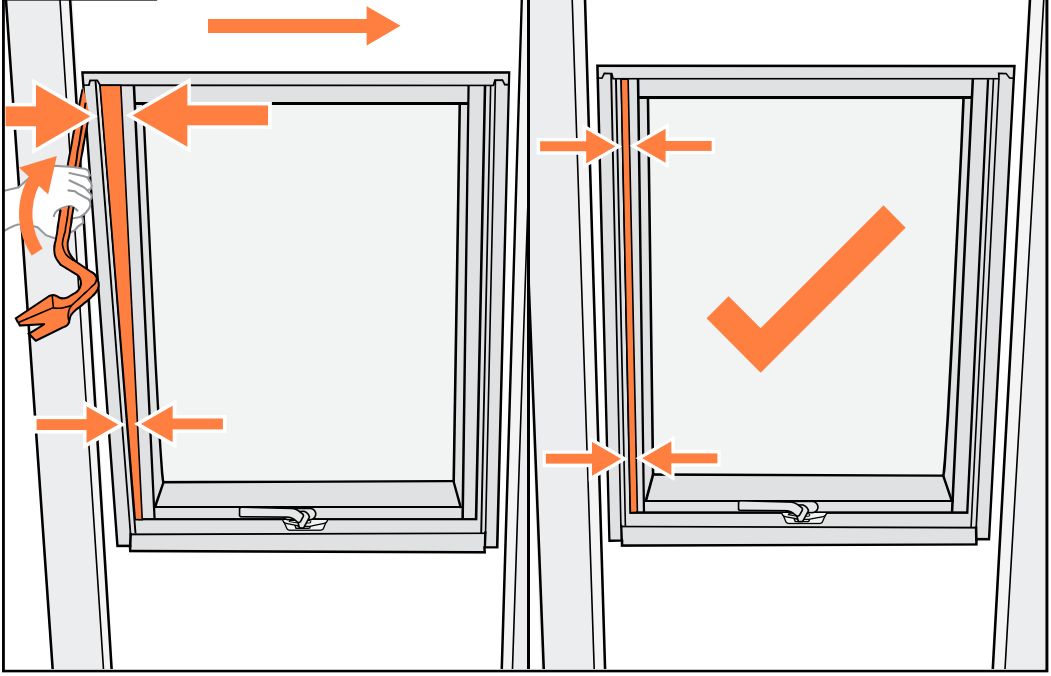

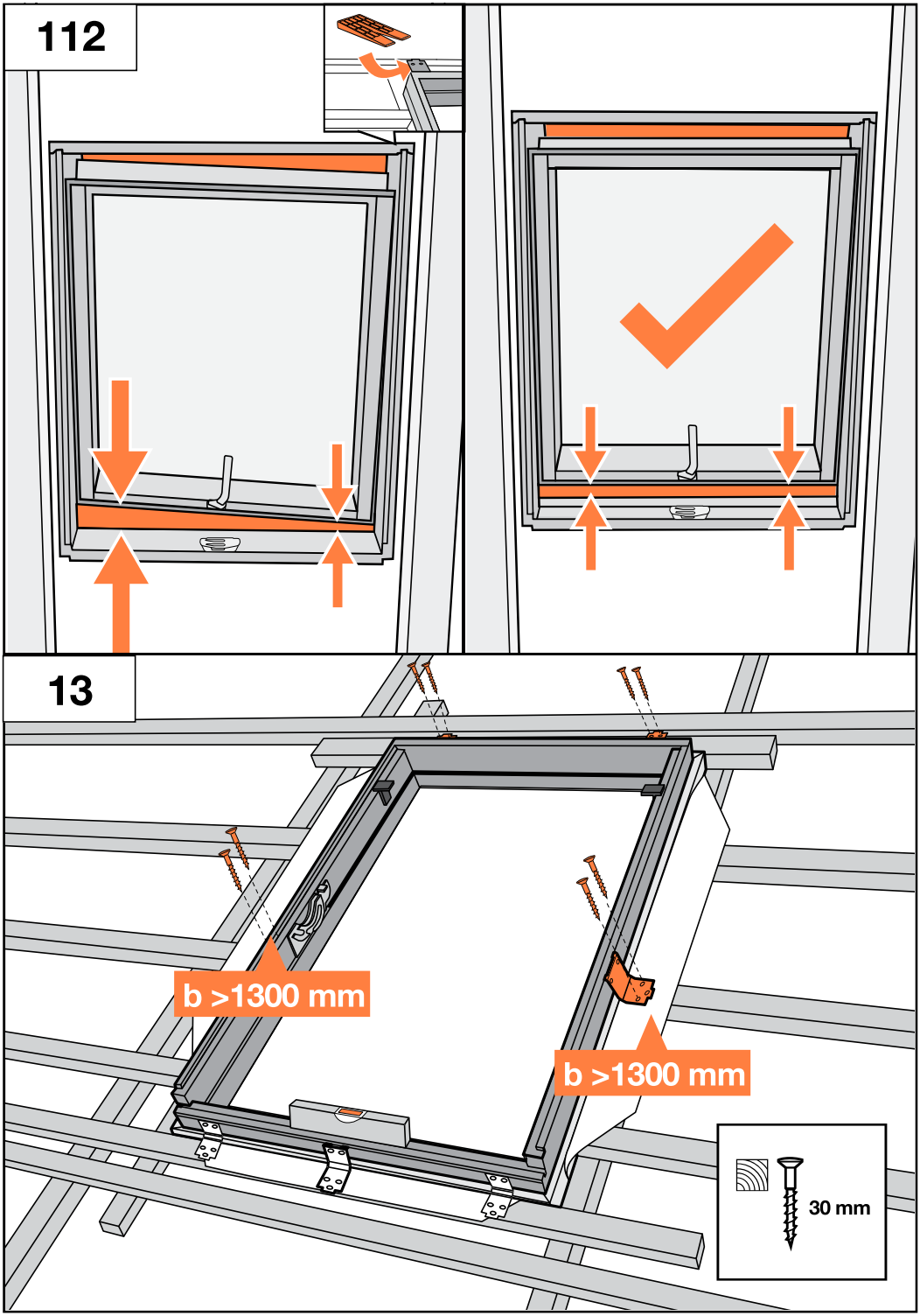
112
13
b >1300 mm
b >1300 mm
30 mm

14a

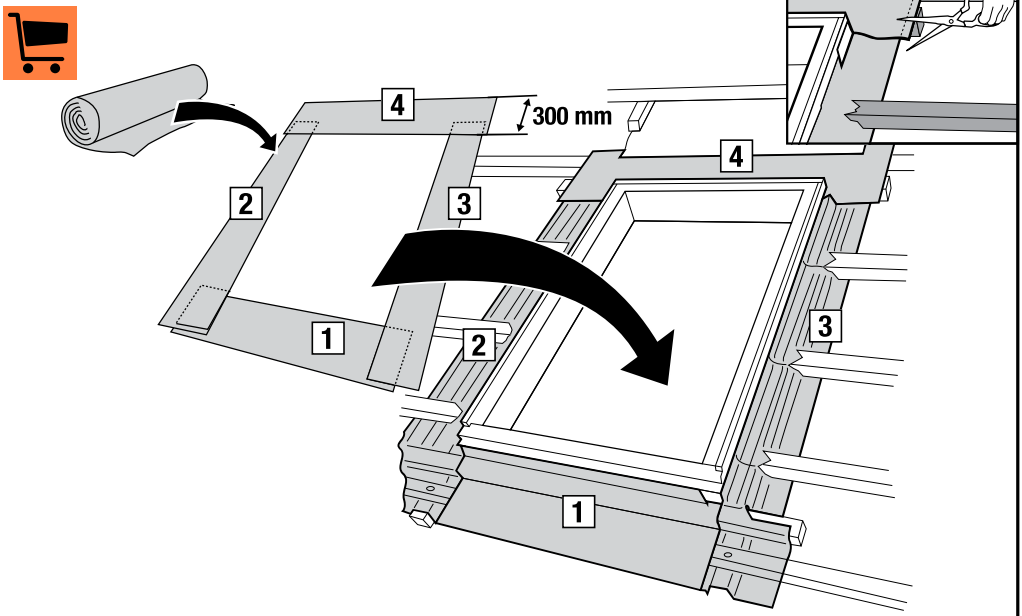

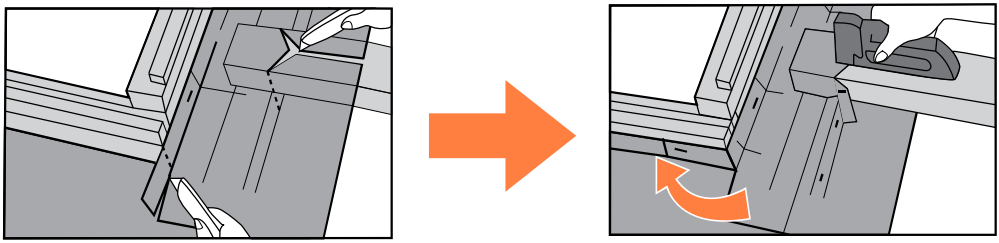

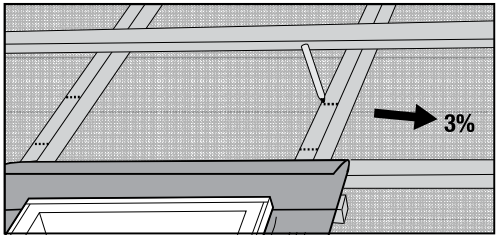

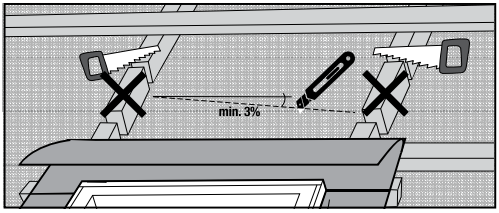

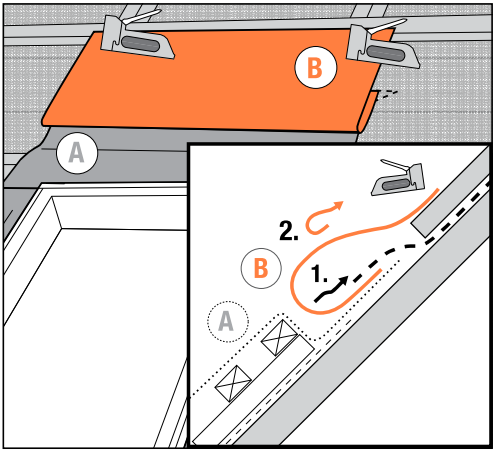

14b

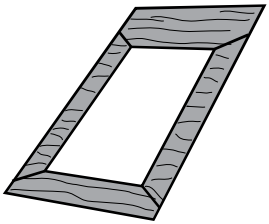

RCF



DG

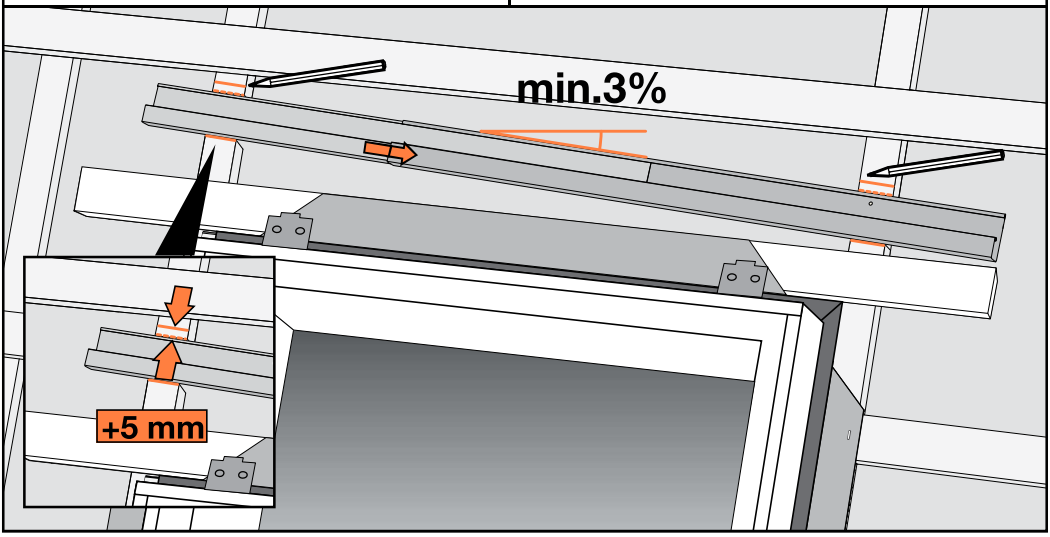

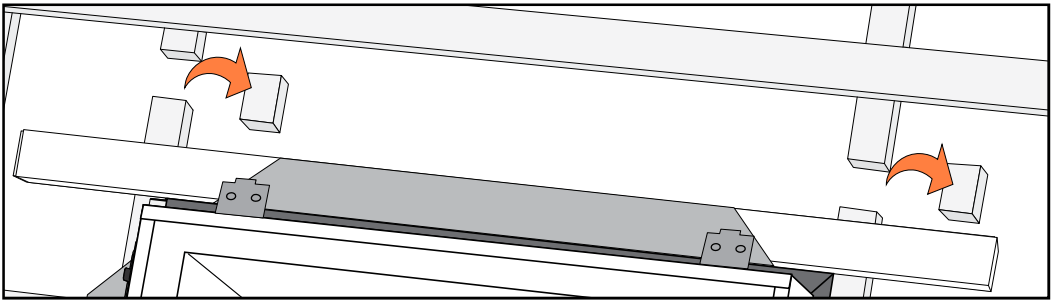

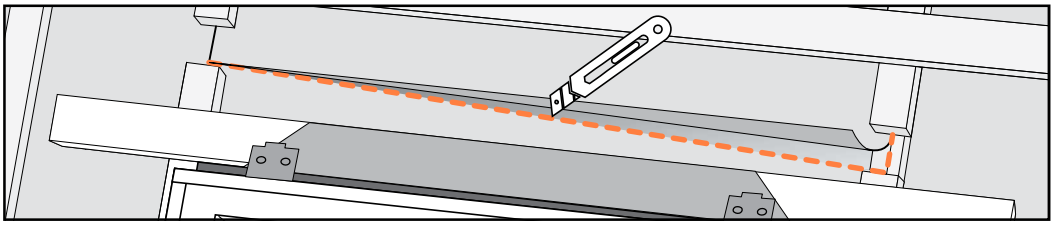

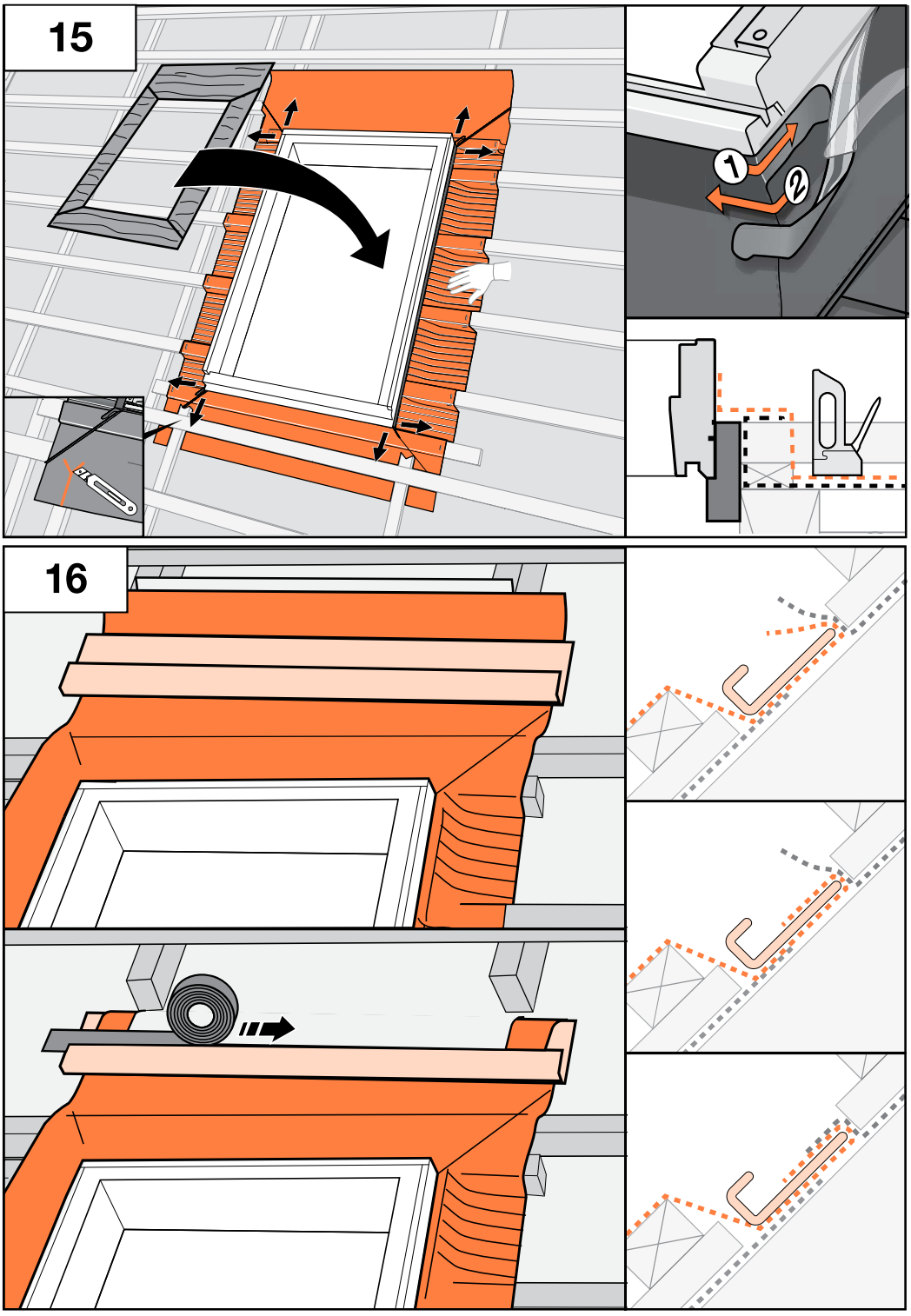
15
1
2
16

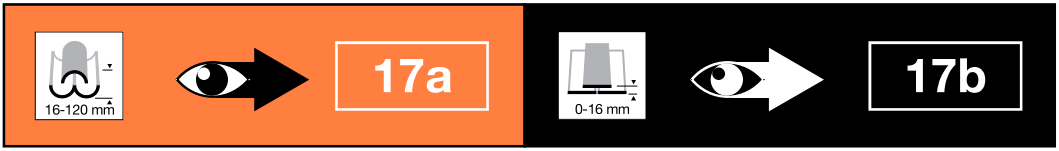
16-120 mm
17a
0-16 mm
17b

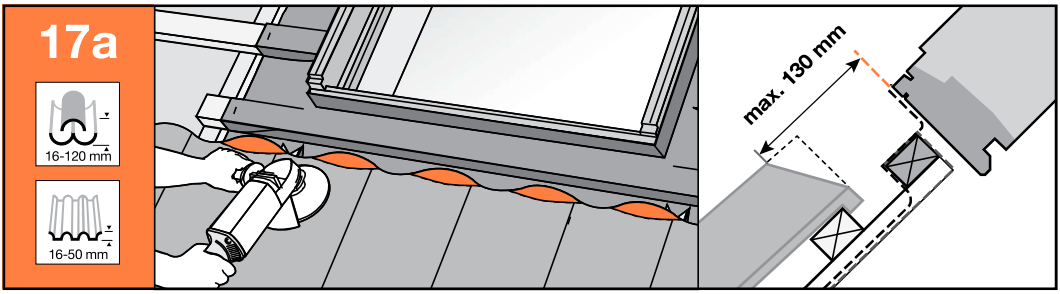
17a
16-120 mm
16-50 mm
max. 130 mm

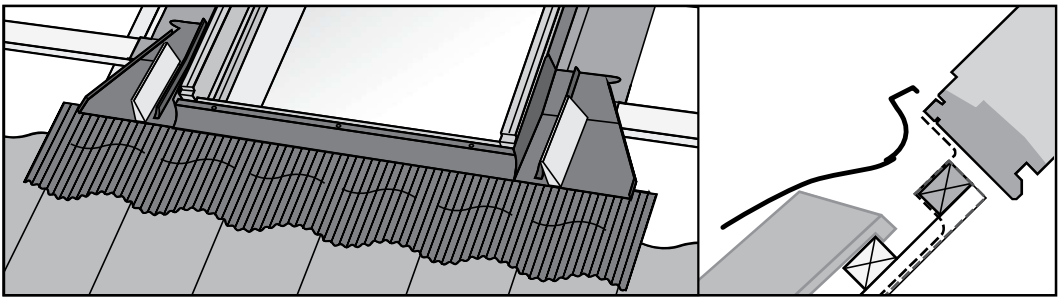

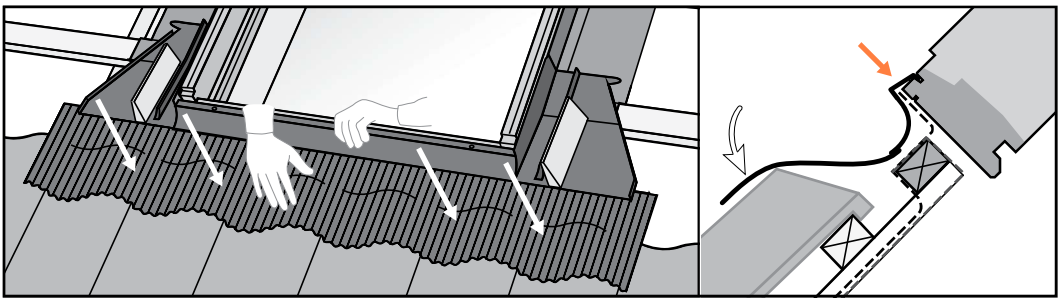

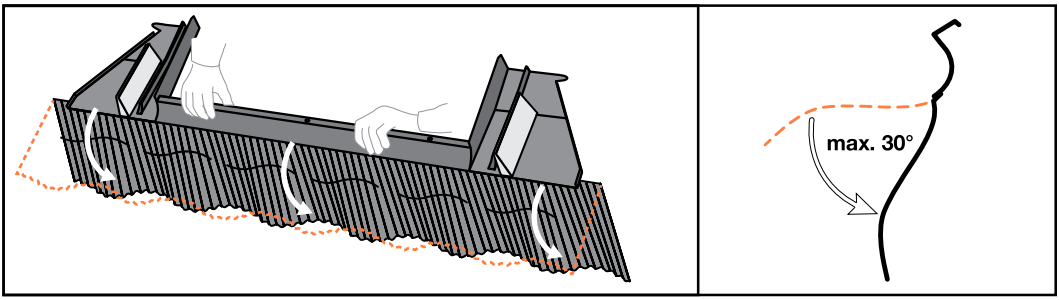
max. 30°

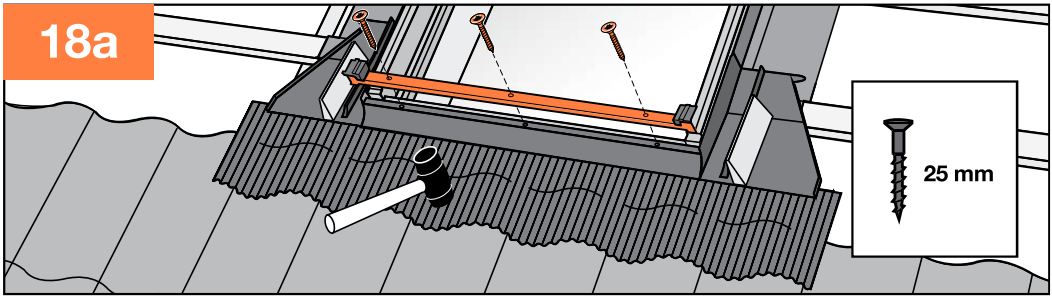
18a
25 mm

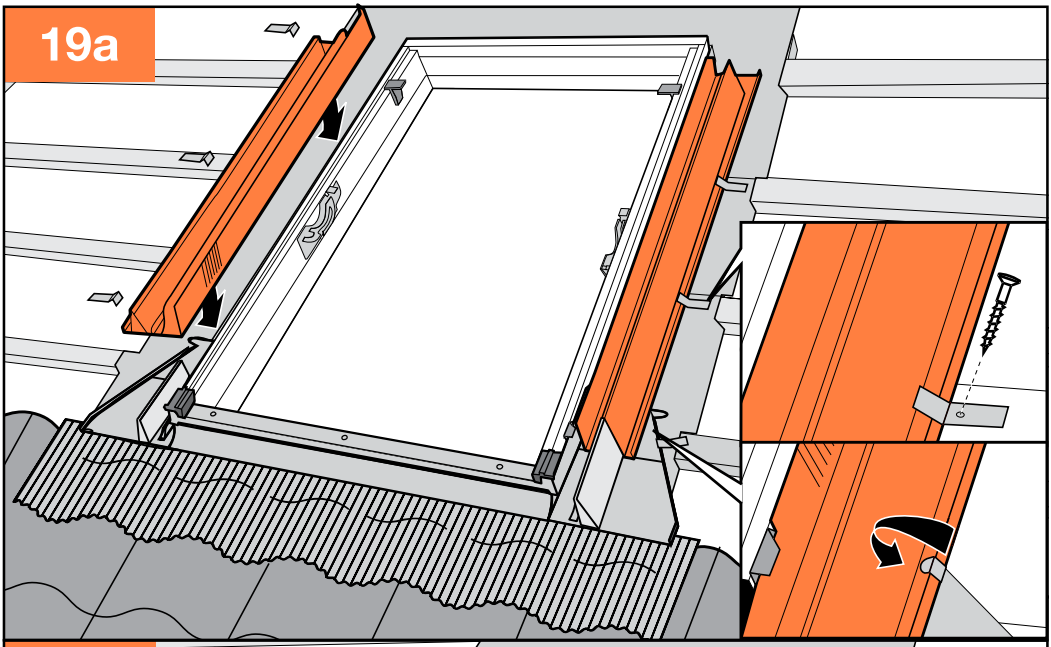
19a

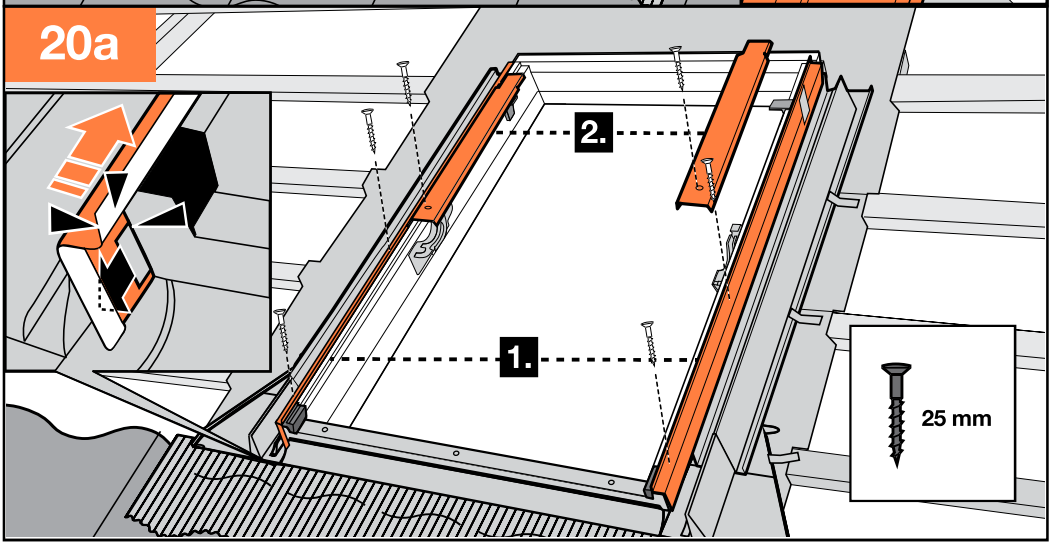
20a
2.
1.
25 mm

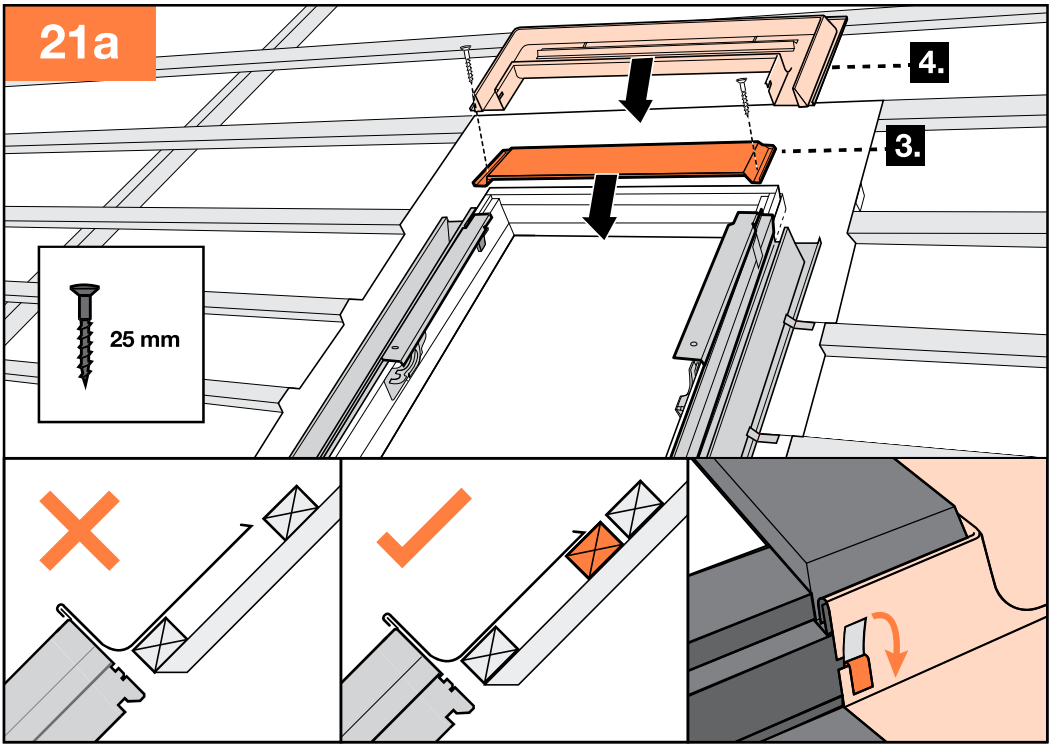
21a
4.
3.
25 mm

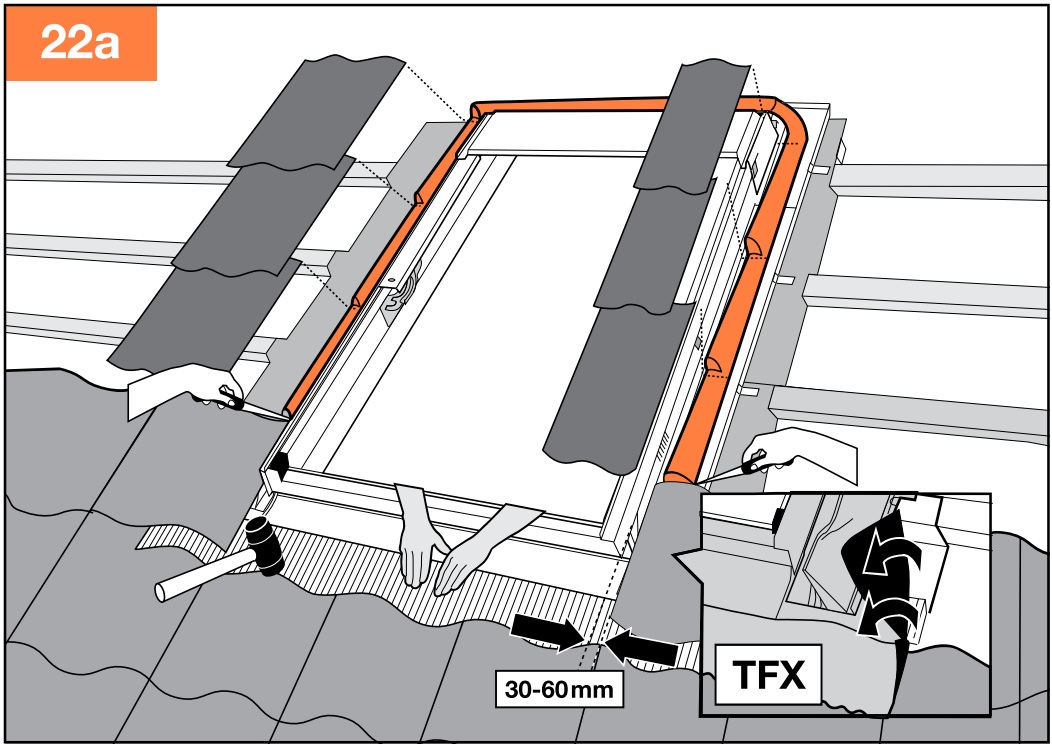
22a
30-60mm
TFX

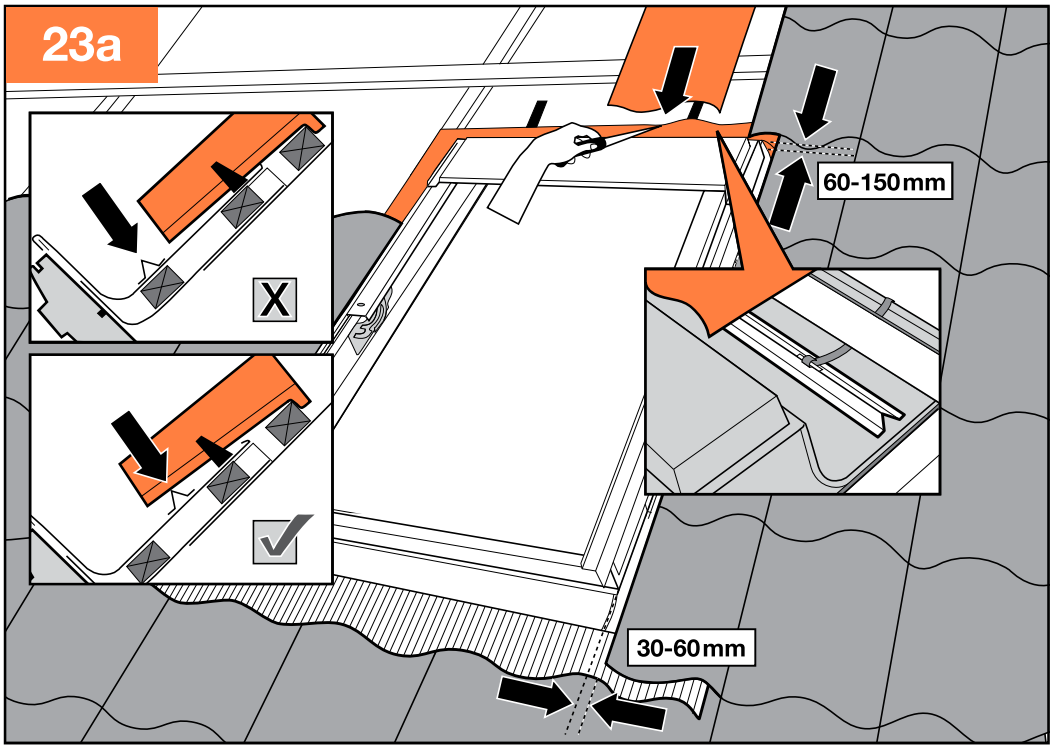
23a
60-150mm
30-60mm

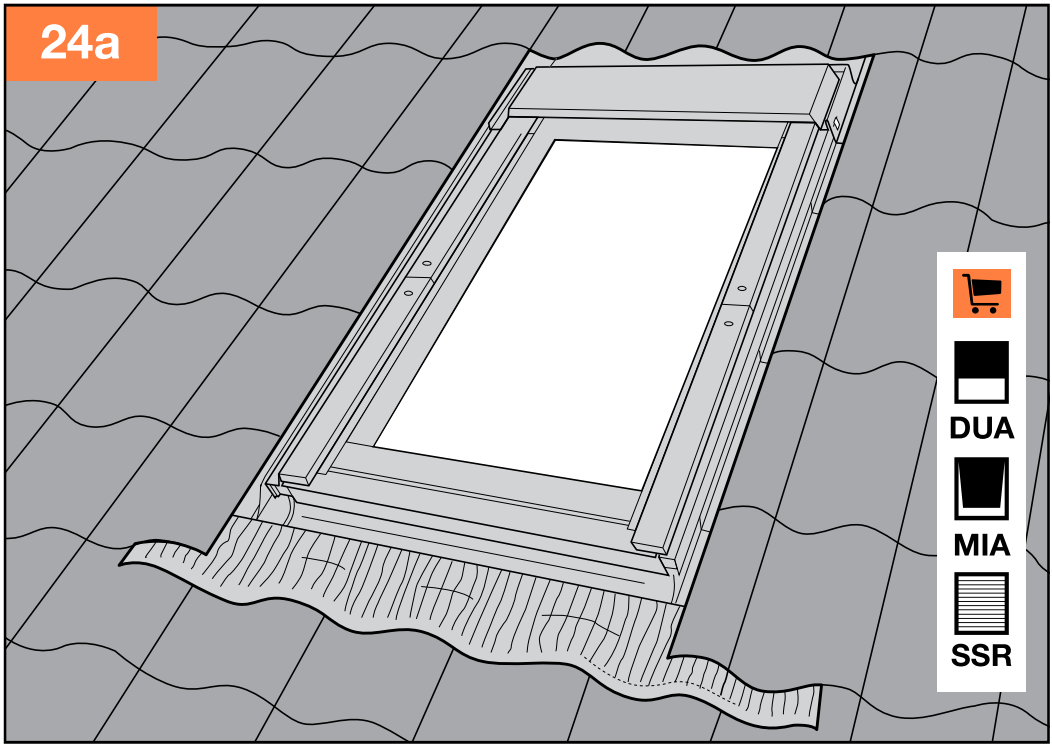
24a
DUA
MIA
SSR

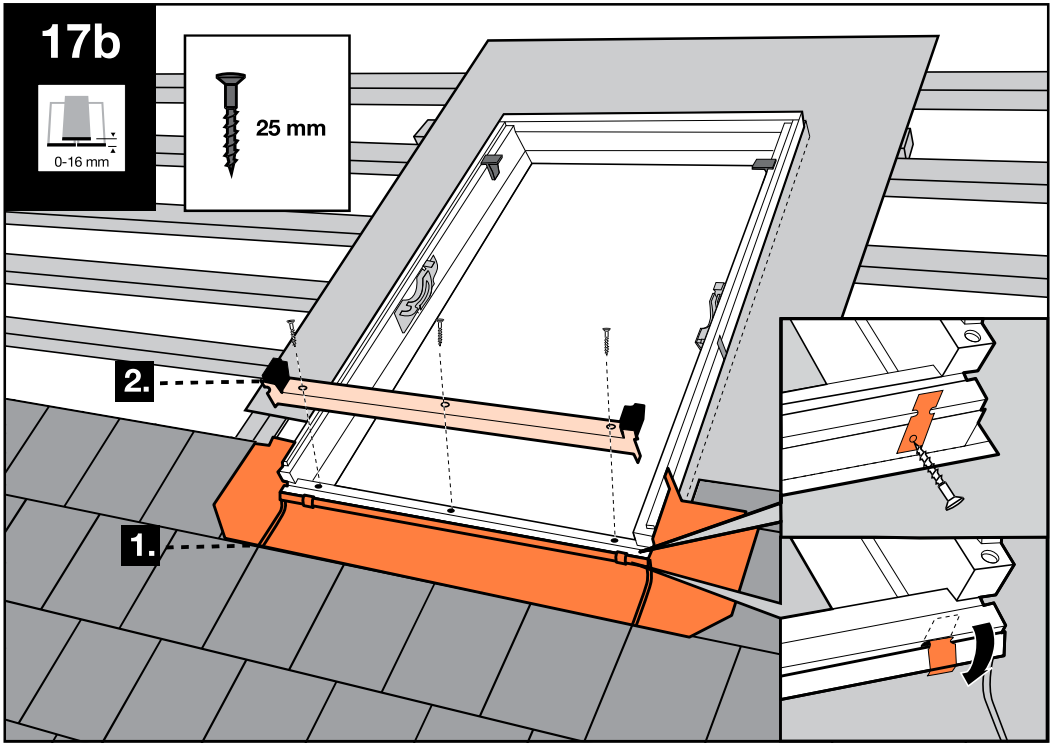
17b
0-16 mm
25 mm
2.
1.

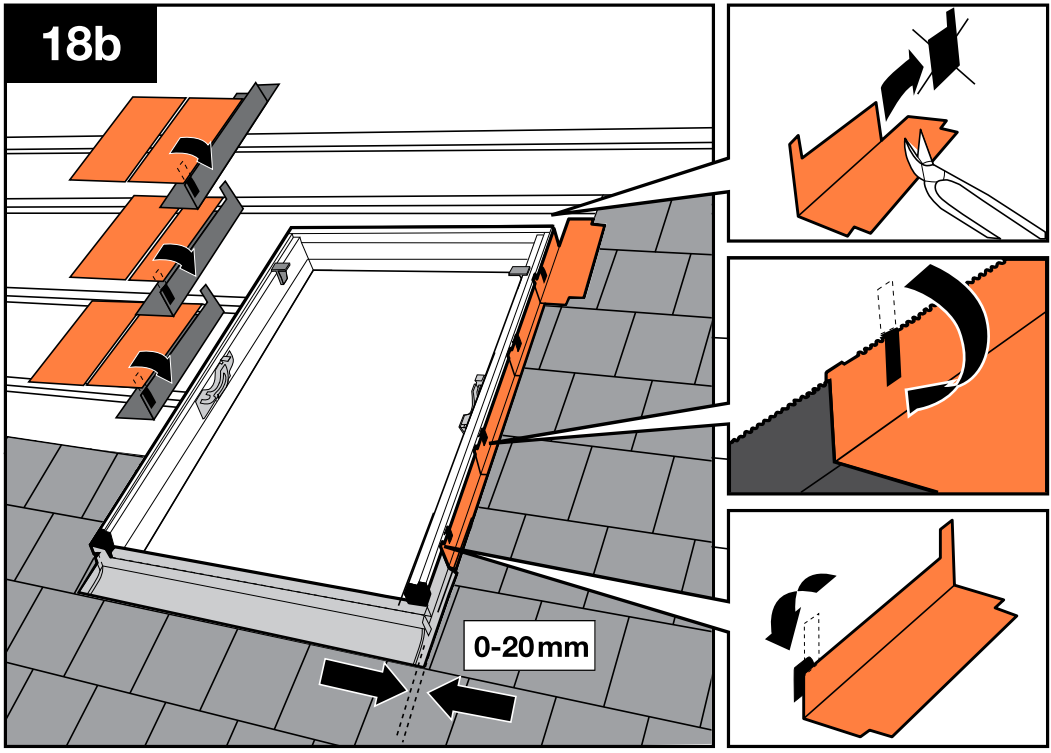
18b
0-20 mm

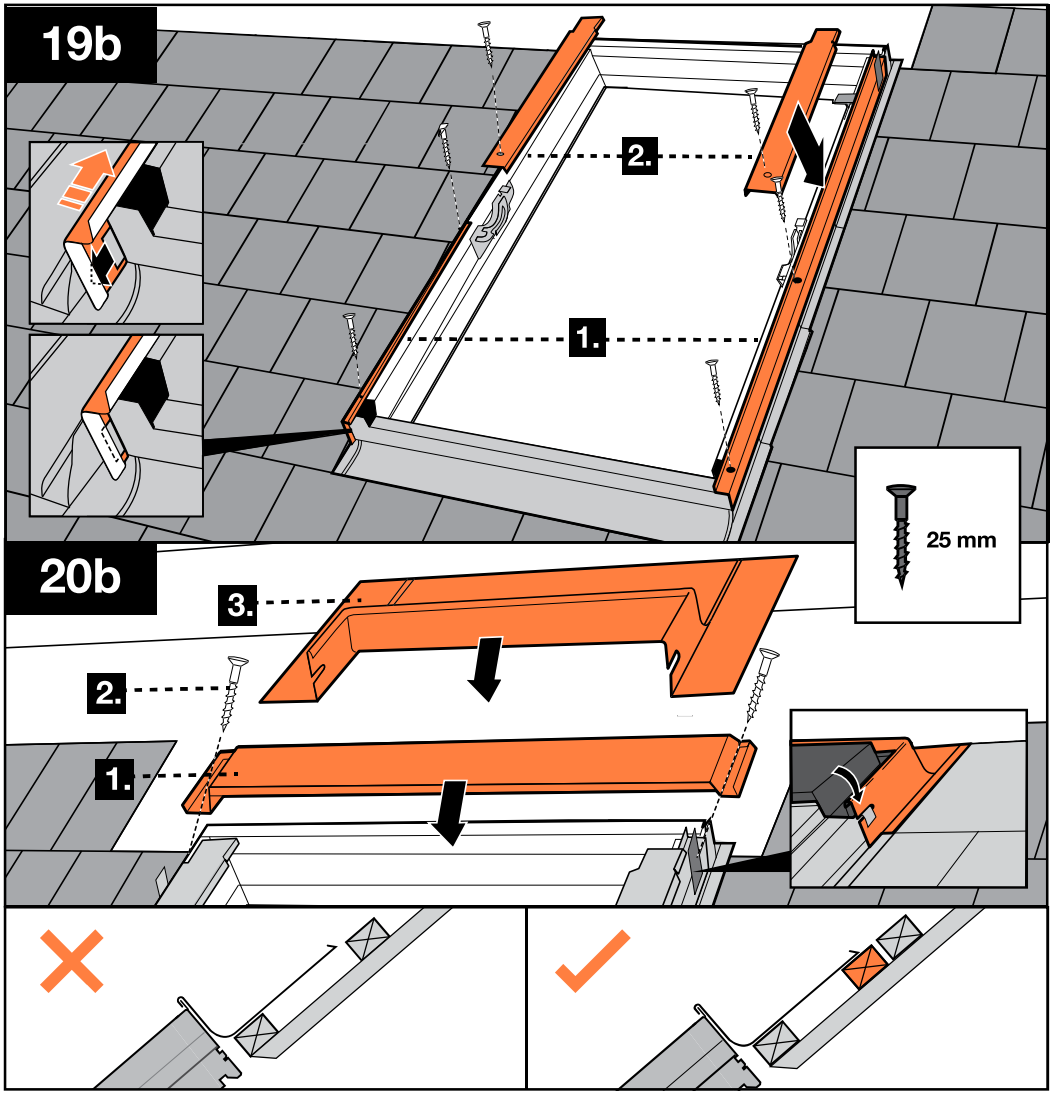
19b
2.
1.
25 mm
20b
3.
2.
1.

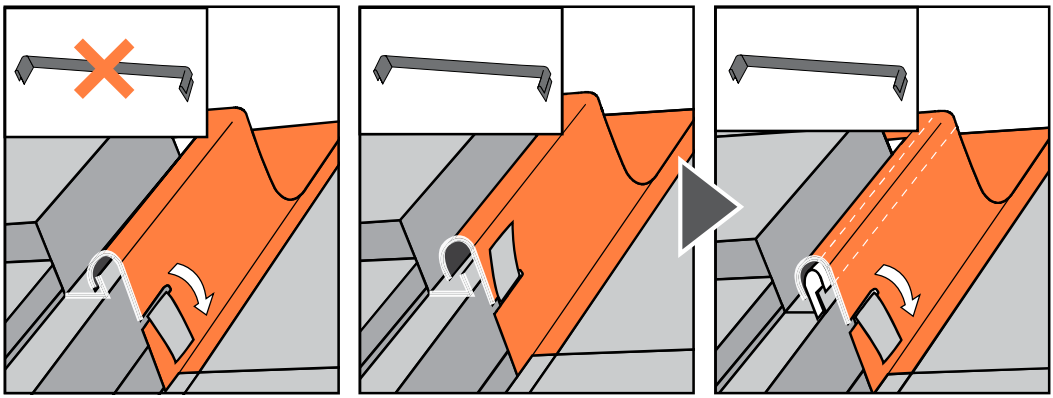

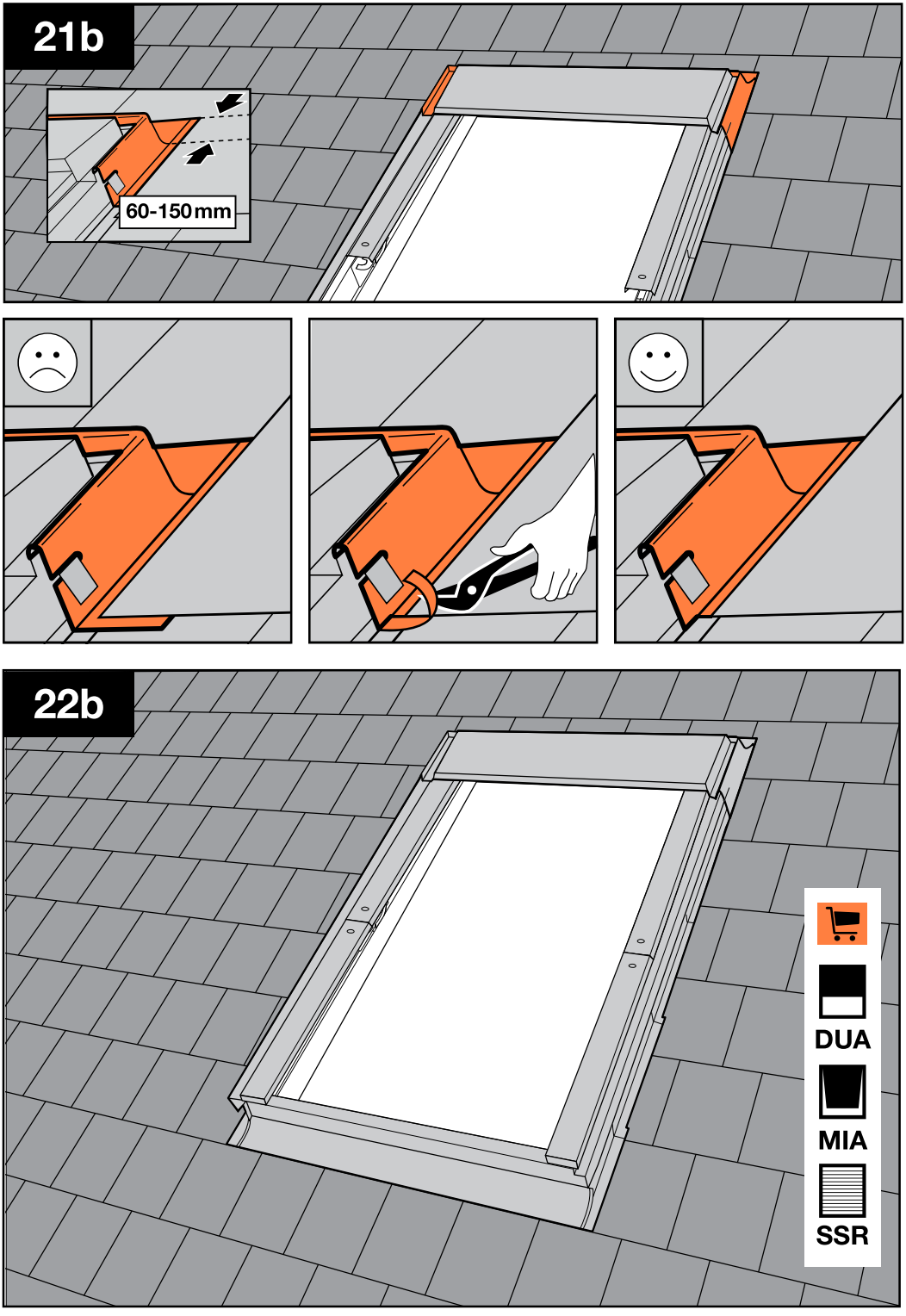
21b
60-150 mm
22b
DUA
MIA
SSR

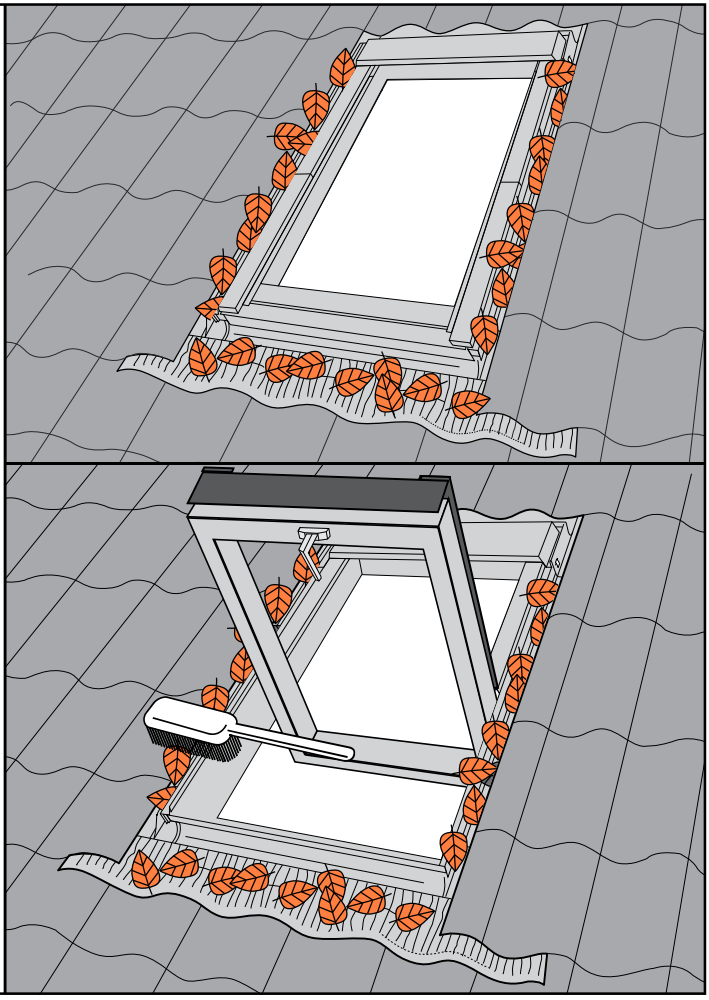

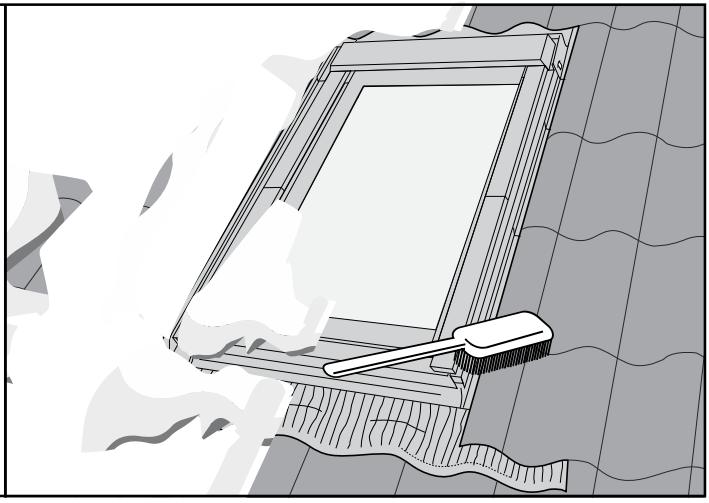

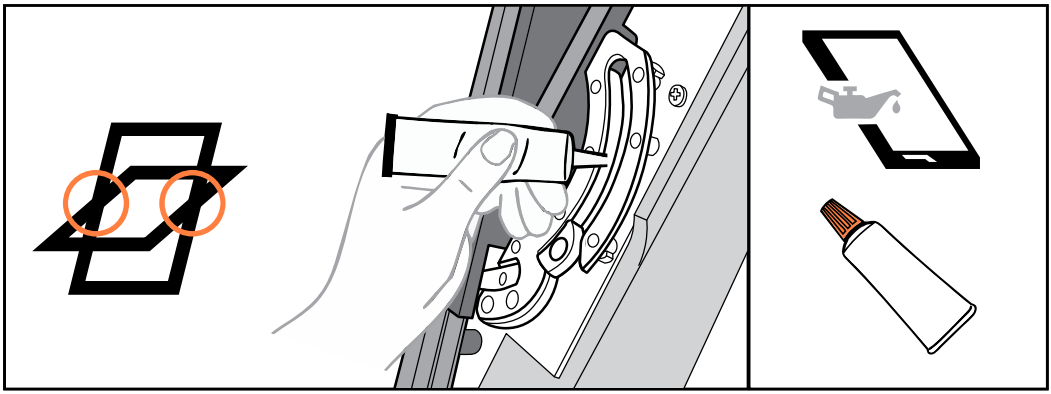

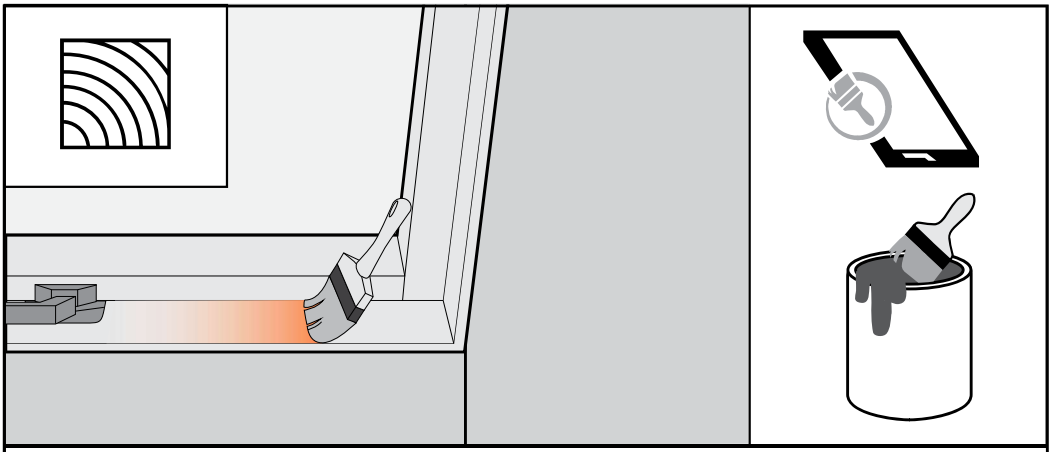

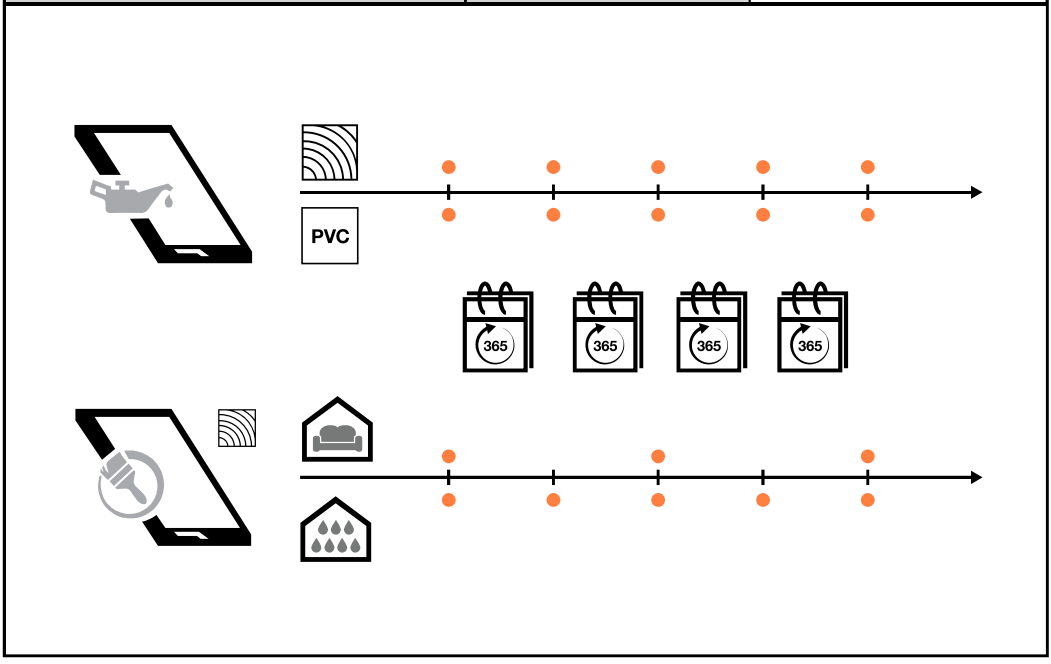
PVC
365
365
365
365

