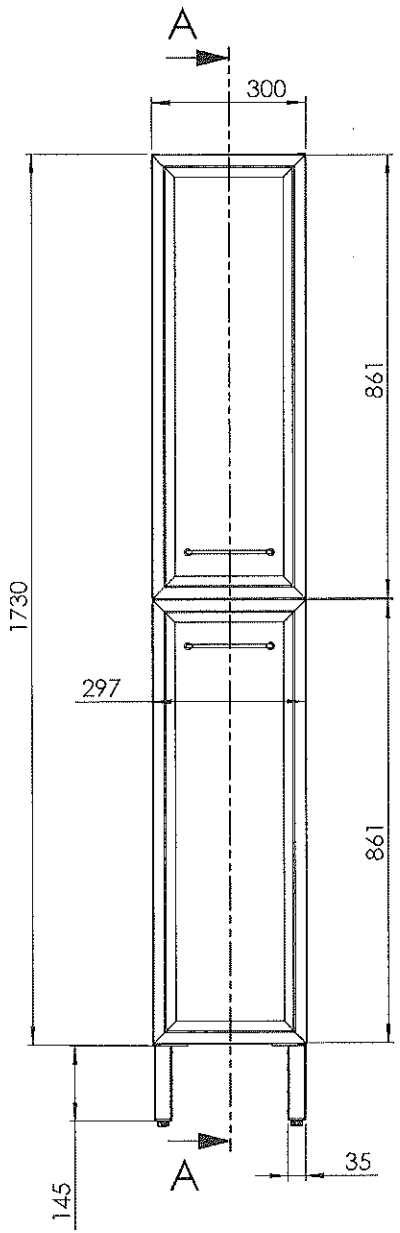

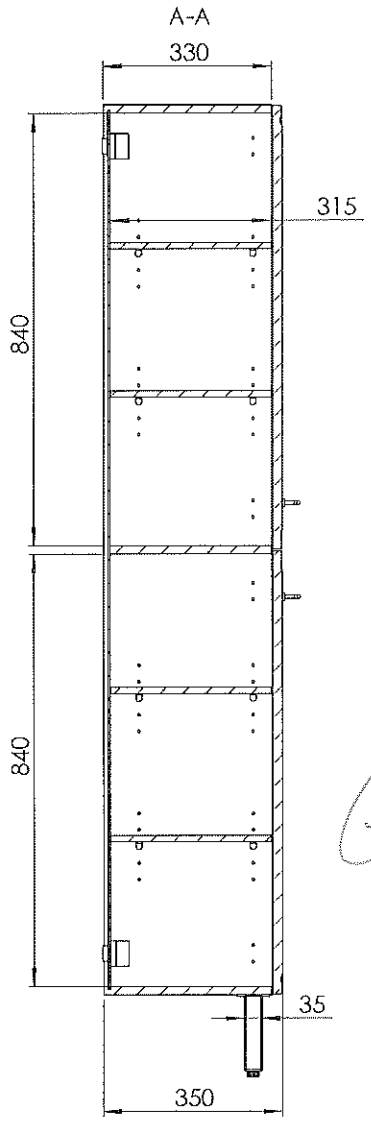

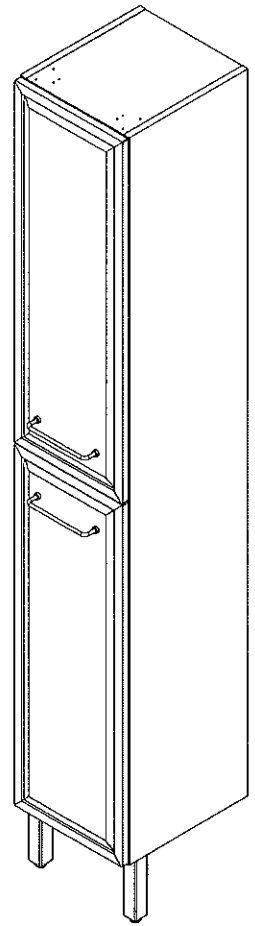

MATERIAL:	DO NOT SCALE DRAWING	SHEET 1 OF 2
SURFACE:	TITLE: 23R07P09-0002-001 F	
LINEAR TOLERANCE: / ANGULAR TOLERANCE: 01-0001-FURNITURE TOLERANCE		
WEIGHT: 27992.93 g	DESCRIPTION: COLUMN CHARM	
SCALE: 1:50 / UNIT: mm / FORMAT: A3		
AUTOR: C.Dormegnie / CHECKER: C.Dormegnie		
STATUS:		
DATE: 30/11/2022		

This drawing is the exclusive property of **ADEO**.
Any reproduction in part or whole without the written permition of ADEO is prohibited.

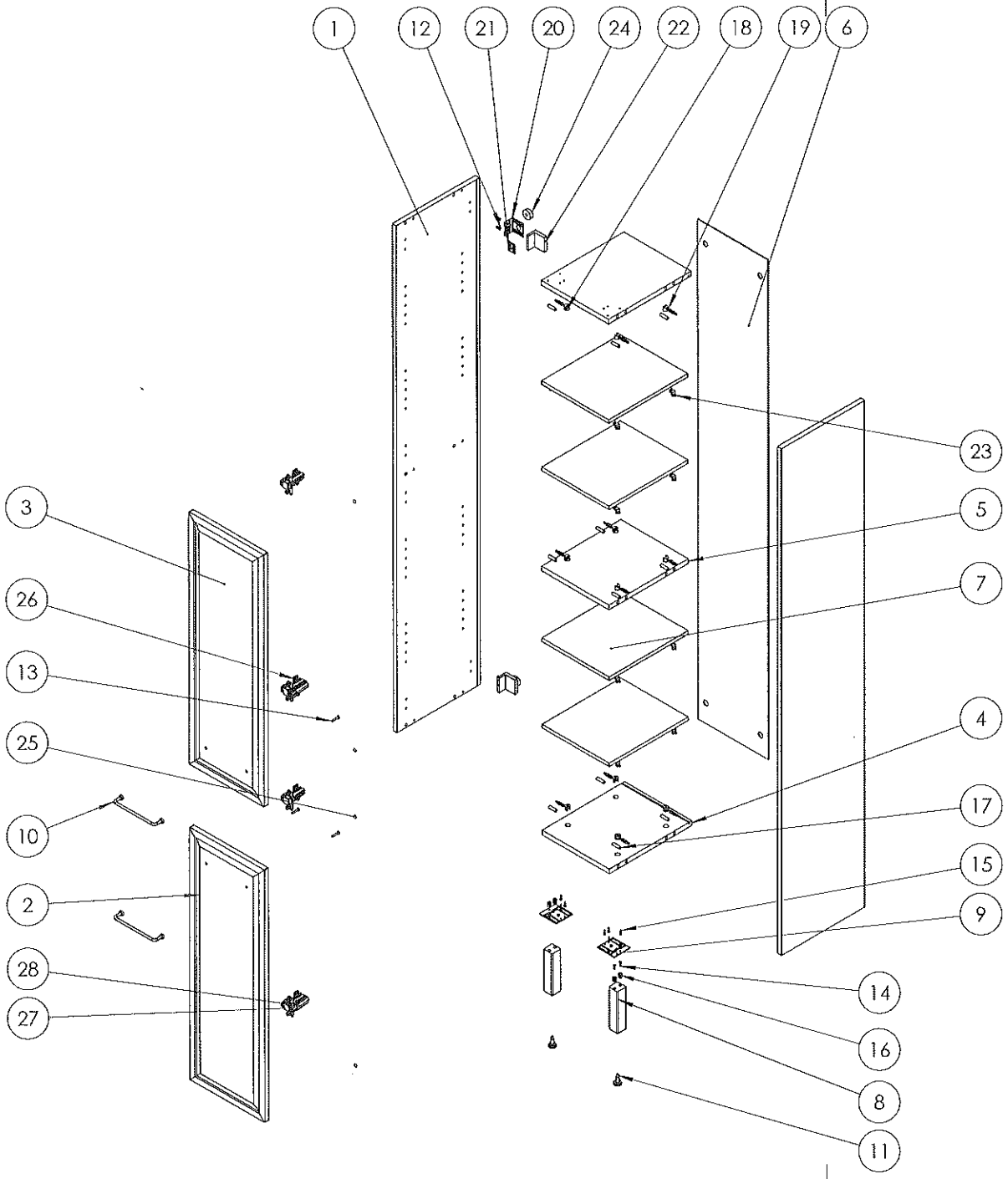

No. ARTICLE	NUMERO DE PIECE	DESCRIPTION	configuration	QTE
1	23R07P09-0002-010	SIDE COLUMN	1729 x 330	2
2	23R07P09-0002-020-04	DOOR	862 x 297 DOOR 1	1
3	23R07P09-0002-020-05	DOOR	862 x 297 DOOR 2	1
4	23R07P09-0002-040-01	TOP BOTTOM SHELF FIX	268 x 330	2
5	23R07P09-0002-040-02	TOP BOTTOM SHELF FIX	268 x 316	1
6	23R07P09-0002-050	BACK PANEL COLUMN	1707 x 279	1
7	23R07P09-0002-070	SHELF	268 x 315	4
8	23R07P09-0003-500-02	Foot	COLUMN	2
9	23R07P09-0003-501	SUPPORT	Default	2
10	23R07P09-0003-700	HANDLE CHARM	FURNIPART 240330160-21 LOUNGE	2
11	ADEO-0000-0015	Leg for socle	CHARM	2
12	ADEO-0001-0002	Euroscrew D6.2x13.5	Défaut	8
13	ADEO-0001-0003	Screw truss cross M4x25	Screw truss cross M4x25	4
14	ADEO-0001-0027	M4x15 TF	DIAM. 4mm	4
15	ADEO-0001-0051	Countersunk screw	Diam. 4 x 16	8
16	ADEO-0001-0052	Insert	Défaut	4
17	ADEO-0002-0001	Wood dowel	D8 x 30	12
18	ADEO-0002-0003	Eccentric box P12 D15	Diam. 15	12
19	ADEO-0002-0004	Eccentric axle L34	For 16mm panel	12
20	ADEO-0003-0002	Wall cabinet hanger 1 (Metal bracket)	Default	4
21	ADEO-0003-0003	Wall cabinet hanger 1 (Metal plate)	Default	4
22	ADEO-0003-0004	Wall cabinet hanger 1 (Plastic cover)	Default	4
23	ADEO-0004-0004	Shelf support pin D5 with lug plug	Default	16
24	ADEO-0008-0001	Spacer D30x10	Défaut	4
25	ADEO-0009-0001	Silicon pad	Défaut	4
26	ADEO-0011-0001	BASE HINGE	BASE HINGE	4
27	ADEO-0011-0001	HINGE	HINGE	4
28	ADEO-0011-0004	SLOWER	SLOWER	2

MATERIAL:
SURFACE:
LINEAR TOLERANCE: 01-0001-FURNITURE TOLERANCE
ANGULAR TOLERANCE:
WEIGHT: 27992.93 g
SCALE: 1:50 | UNIT: mm | FORMAT: A3
AUTOR: C.Dormegnie | CHECKER: C.Dormegnie
STATUS:
DATE 30/11/2022

DO NOT SCALE DRAWING | SHEET 2 OF 2

TITLE:
23R07P09-0002-001 F

DESCRIPTION:
COLUMN CHARM

This drawing is the exclusive property of **ADEO**.
Any reproduction in part or whole without the written permition of **ADEO** is prohibited.

adeo