Product exploded view

ADEO Ref	**95849378**
EAN Code	**3276007969511**

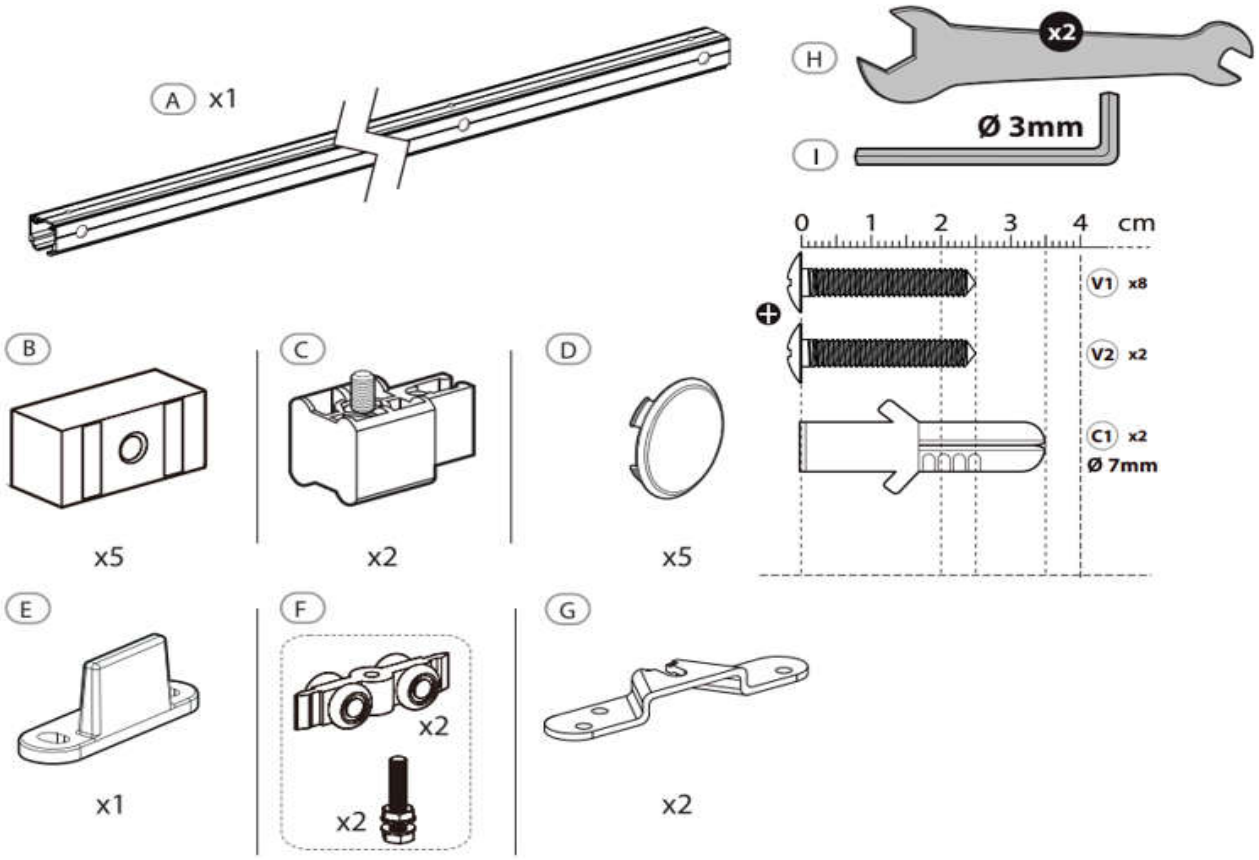

Parts No.	Name	Quantity	Material & Surface process
A	Sliding rail	1	Aluminum&ALU
B	Spacer	5	Nylon&Black
C	Door Stopper	2	POM;Rubber;Carbon steel;SS304 & Black
D	Hole cap	5	ABS&Grey
E	Floor guide	1	POM&Black
F	Sliding roller	2	Stainless steel;Zinc;POM&Steel
G	Roller&Door connector	2	Carbon steel &galvanized
H	Wrench	2	Carbon steel &galvanized
I	Hex Wrench	1	Carbon steel &galvanized
V1	Screw	8	Stainless steel&Steel
V2	Screw	2	Stainless steel&Steel
C1	Wall Plug	2	PE&White