MODES

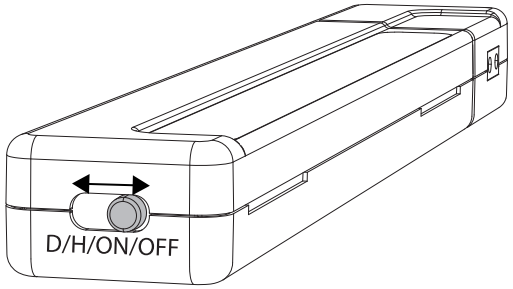

MODE 1- D | MODE 2- H | 3-ON | 4-OFF

MODES 1

MODE 1- D

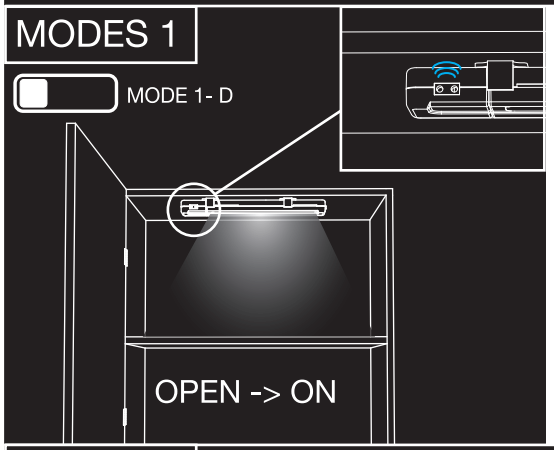



MODES 2

MODE 2- H

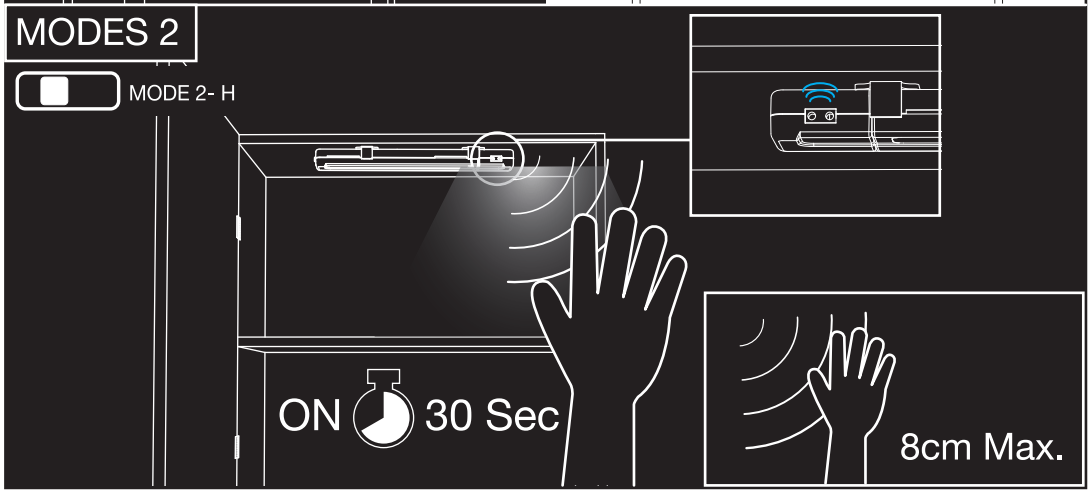

III

GROUP 0
EN 62471 : 2008

VO1
XanLite - Yantec
92 Bd Victor Hugo , 92110 Clichy - France

XANLITE HOME

FR GB ES
PT IT NL

ECP80DCW

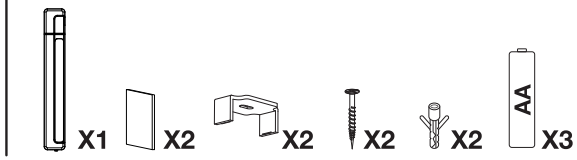

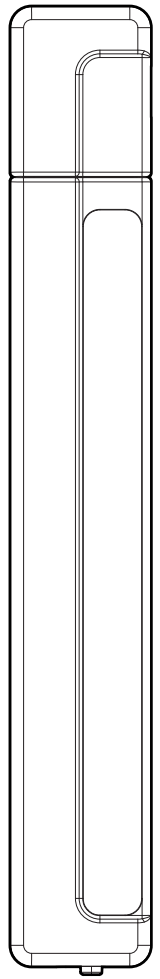

100lm

LED	4000K	IP20	25000h	x12.500 ON / OFF	Ta	min -20°C max 50°C	3x AA 1.5V R6P

A

1

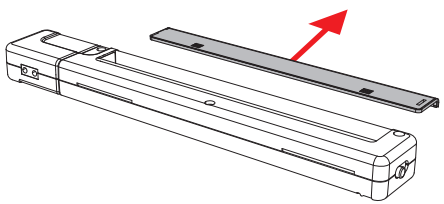

2

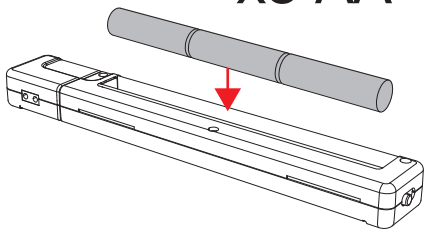

5

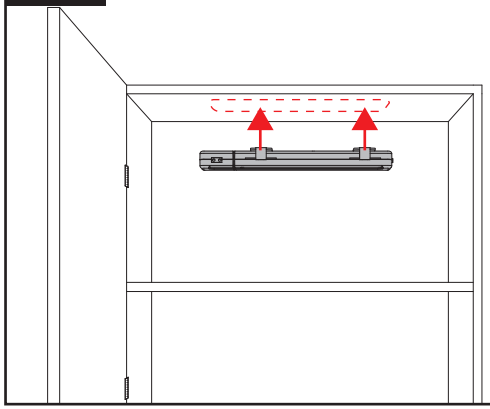

6

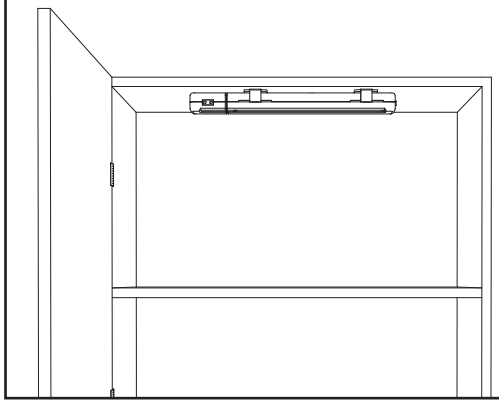

B

1

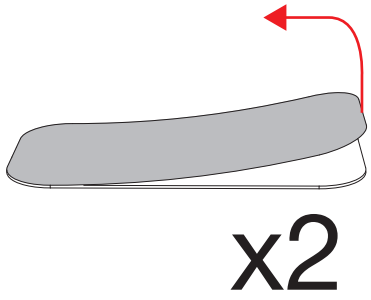

2

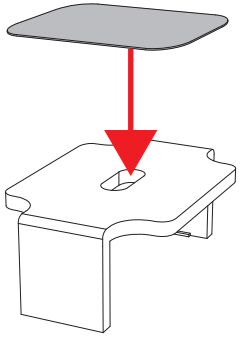

C

1

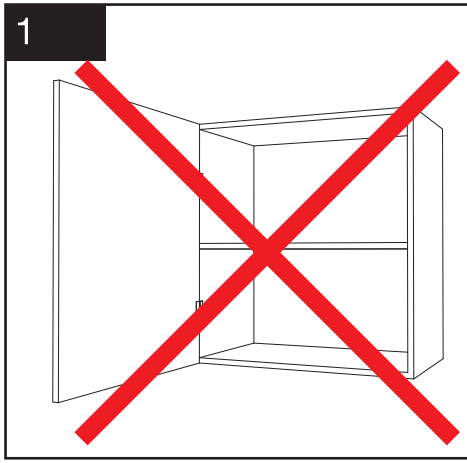

2

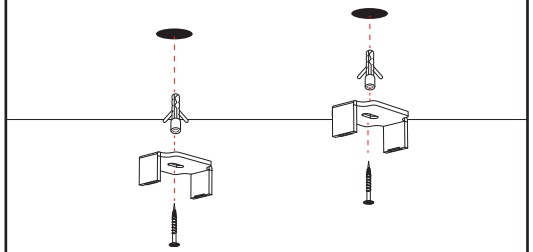

3

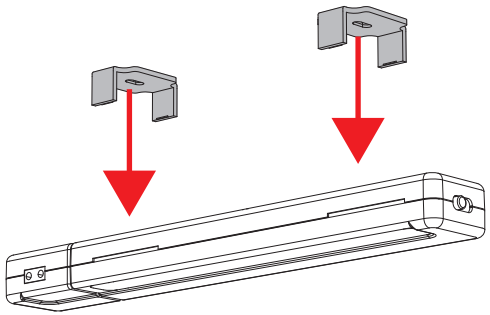

4

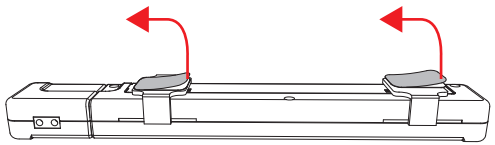

3

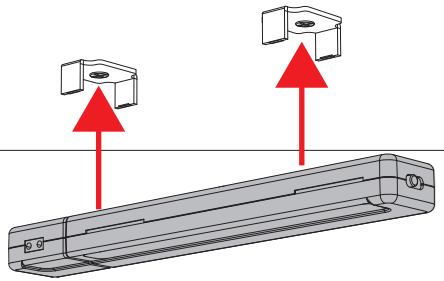

4

