COSTWAY®

US office: Fontana **UK** office: Ipswich **AU** office: Truganina
DE office: FDS GmbH, Neuer Höltigbaum 36, 22143 Hamburg, Deutschland
FR office: Saint Vigor d'Ymonville **PL** office: Gdańsk

COSTWAY®

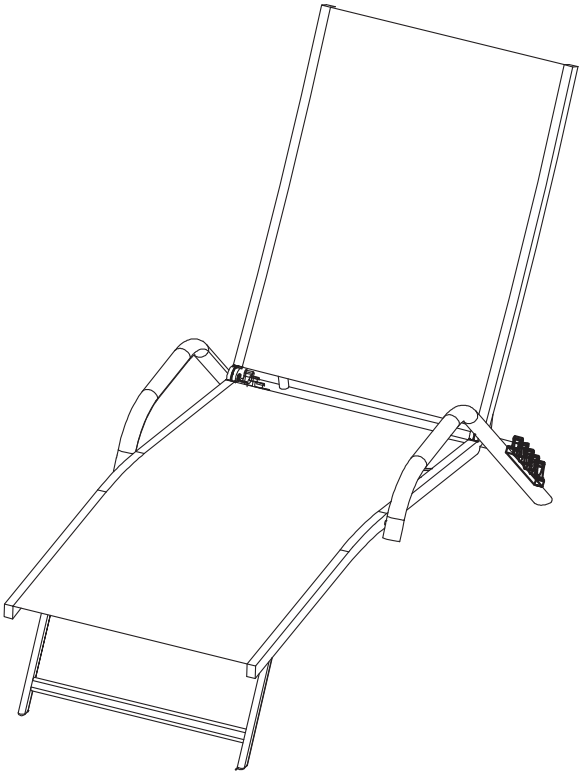

USER'S MANUAL/HANDBUCH /MANUEL DE L'UTILISATEUR/MANUAL DEL USUARIO /MANUALE UTENTE/INSTRUKCJA OBSŁUGI

NP10548

Chaise Lounge Chair Set of 2 / 2-er Set Sonnenliege / Lot de 2 Chaise Longue / Juego de 2 Tumbonas / Set di 2 Sedie a Sdraio / Zestaw 2 szezlongów

THIS INSTRUCTION BOOKLET CONTAINS **IMPORTANT** SAFETY INFORMATION. PLEASE READ AND KEEP FOR FUTURE REFERENCE.

Ⓐ x1

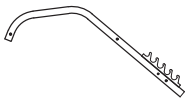

Ⓑ x1

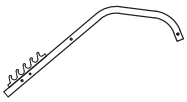

Ⓒ x1

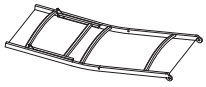

Ⓓ x1

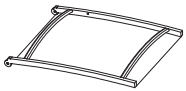

Ⓔ x1

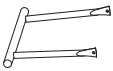

Ⓕ x1



Ⓖ x12



M6

Ⓗ x2



M8

Ⓘ x2



Ⓙ x4



M6*18mm

Ⓚ x4



M6*25mm

Ⓛ x2



M6*35mm

Ⓜ x10



Ⓝ x2



Ⓞ x2



M6

Ⓟ x2



M6

Ⓠ x1



Ⓡ x1



1

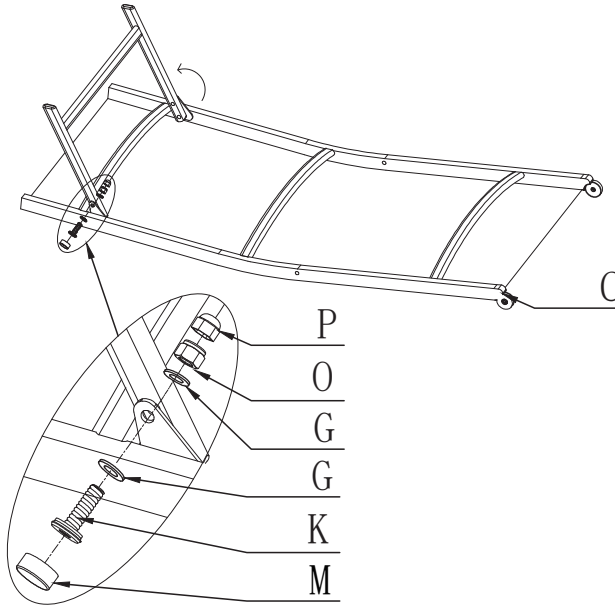

2

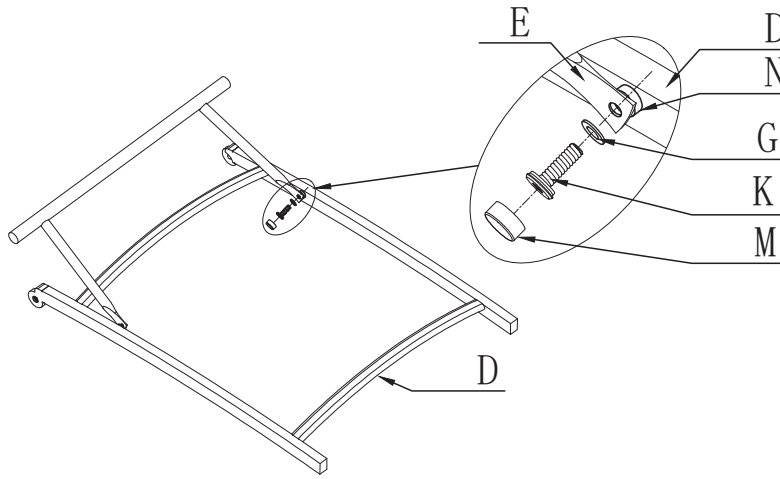

3

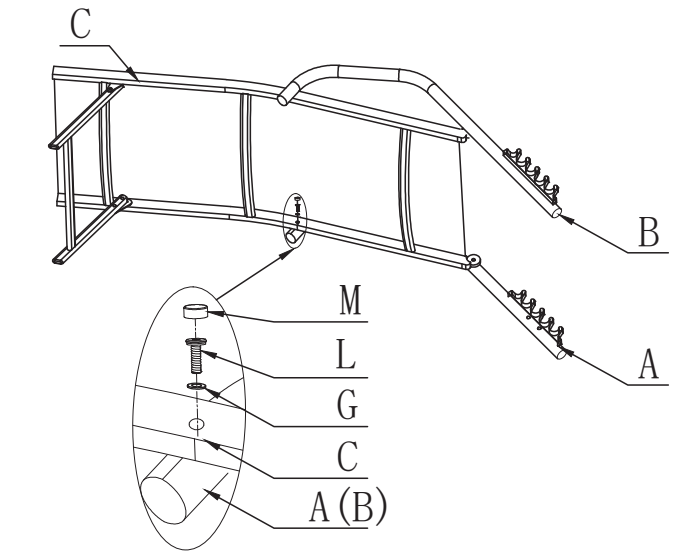

4

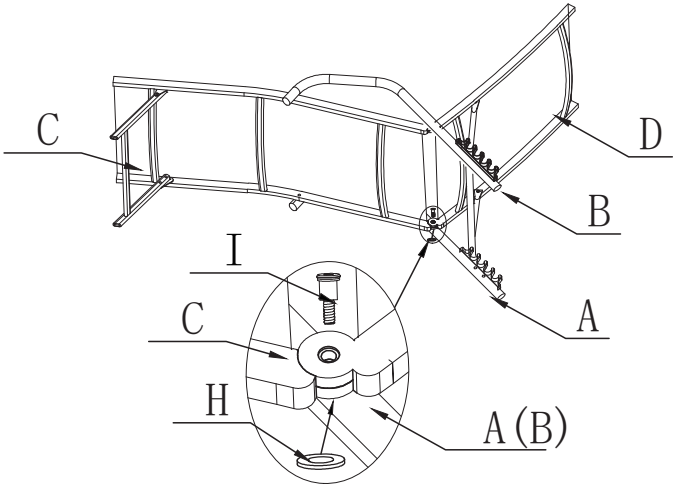

5

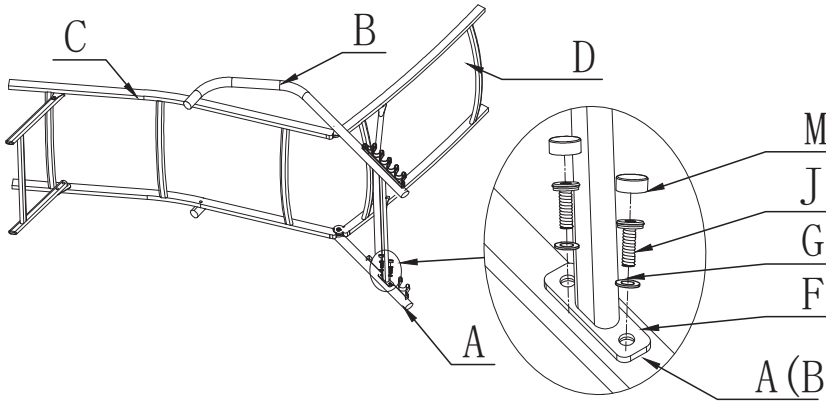

6

