VEVOR

Upgrade · The Home Creator Way

RECORD PLAYER STAND RACK

USER MANUAL

MODEL NO.: C240353G-02

VEVOR
Upgrade · The Home Creator Way

Record Player Stand Rack

MODEL NO.: C240353G-02

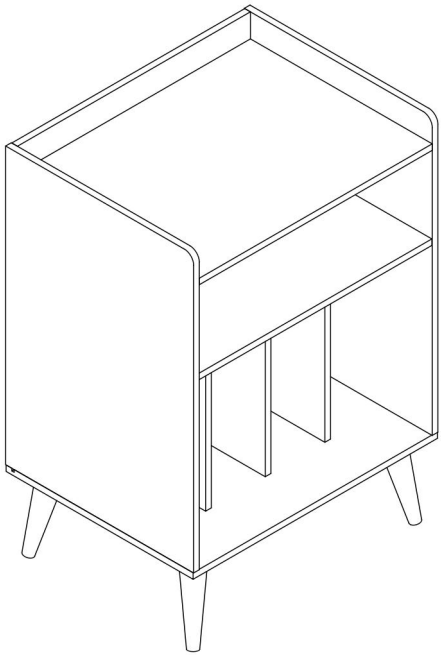

This is the original instruction, please read all manual instructions carefully before operating. VEVOR reserves a clear interpretation of our user manual. The appearance of the product shall be subject to the product you received. Please forgive us that we won't inform you again if there are any technology or software updates on our product.

⚠ WARNING:

Please read this manual carefully before using the product. Failure to do so may result in serious injury.

1. The product complies with relevant standards and regulations. Installation of this device must comply with all applicable regulations, and it should only be operated in well-ventilated areas. Please read the user manual before installing and using this equipment.
2.This appliance is not intended for use by persons (including children) with reduced physical, sensory or mental capabilities, or lack of experience and knowledge, unless they have been given supervision or instruction concerning use of the appliance by a person responsible for their safety.
3.Children shall not play with the produce.
4.This produce shall not be used by children. Keep the appliance and its cord out of reach of children.
5.This appliance is intended to be used in household and similar applications such as:
- staff kitchen areas in shops, offices and other working environments;
- farm houses;
- by clients in hotels, motels and other residential type environments;
- bed and breakfast type environments.
6.Please properly keep product. Check whether the product is abnormal before use. If it is abnormal, please stop using it.
7.Please use the product according to the intended use, warn of potential injury from misuse.
8.If the supply cord is damaged, it must be replaced by a special cord or assembly available from the manufacturer or its service agent.

ASSEMBLY PRECAUTIONS

1. Assemble only according to these instructions. Improper assembly can create hazards.

2. Wear ANSI-approved safety goggles and heavy-duty work gloves during assembly.

3. Keep the assembly area clean and well-lit.

4. Keep bystanders out of the area during assembly.

5. Do not assemble when tired or when under the influence of alcohol, drugs or medication.

6. The product capabilities apply to properly and completely assembled products only.

7. Assemble on a flat, level, hard and smooth surface capable of safely supporting the Record Player Stand Rack.

8. For additional information regarding the parts listed in the following pages, please refer to the Assembly Diagram of this manual. Unwrap and separate all parts in a clean work area.

SAVE THESE INSTRUCTIONS

USE PRECAUTIONS

TO PREVENT SERIOUS INJURY AND DEATH FROM TIPPING:

1. This product is not a toy. Do not allow children to play with or near this item.

2. Do not exceed weight capacities before moving.

3. Use only on a flat, hard and smooth surface capable of safely supporting a fully loaded Record Player Stand Rack.

4. Use as intended only.

5. Inspect before every use; do not use if parts are loose or damaged.

TECHNICAL SPECIFICATIONS

Model	C240353G-02
Rating(s)	220-240Vac, 50/60Hz, 10A
Product Dimensions (LxWxH)(mm)	520*400*750
Net Weight(kg)	About 12.35

*Products such as specifications, appearance, and design are subject to modification without prior notice.

PARTS LIST

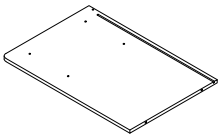

❶ 1pc

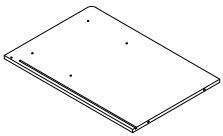

❷ 1pc

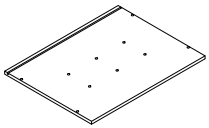

❸ 1pc

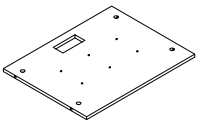

❹ 1pc

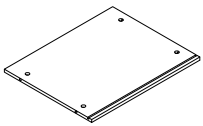

❺ 1pc

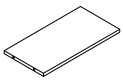

❻ 3pcs

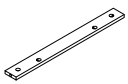

❼ 1pc

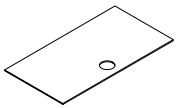

❽ 2pcs



❾ 1pc

Parts & Hardware List

 A 18pcs	 B 10pcs	 C 18pcs	 P 30pcs	 S 4pcs	 U 8pcs	 V 1pc
 X 1pc	 Y 4pcs	 Z 4pcs				

ASSEMBLY STEPS

1

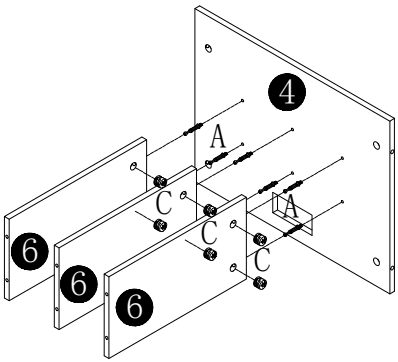

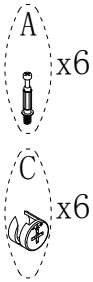

2

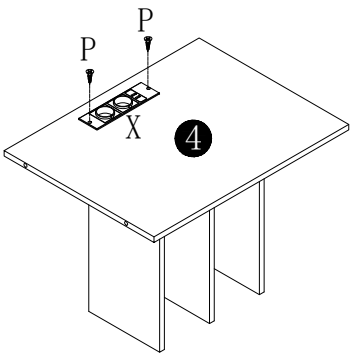

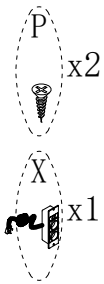

3

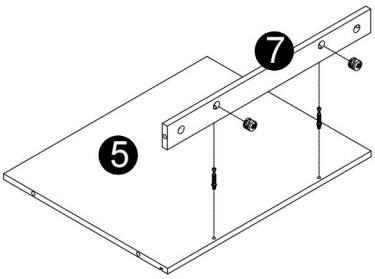

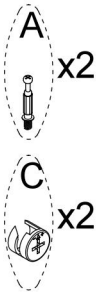

4

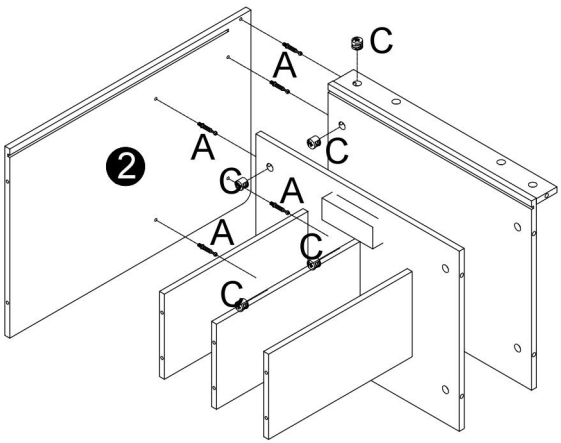

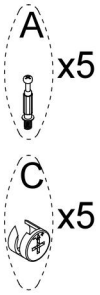

5

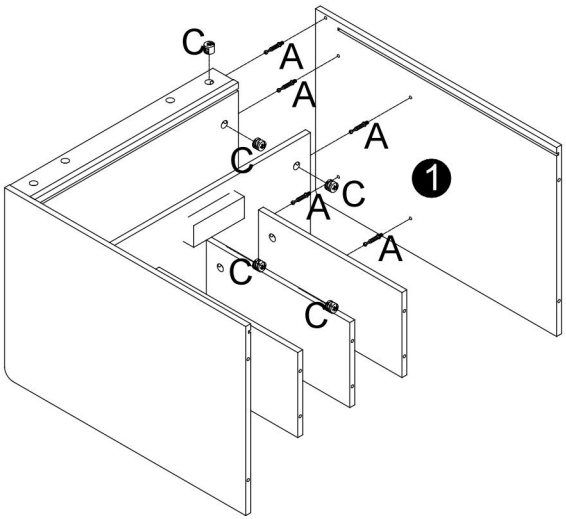

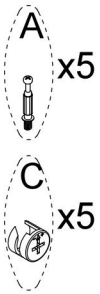

6

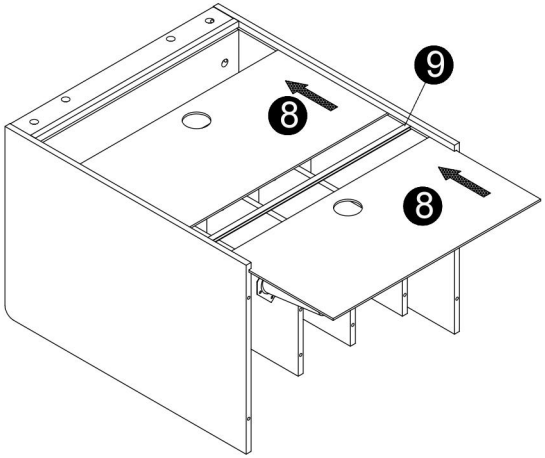

7

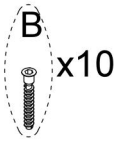

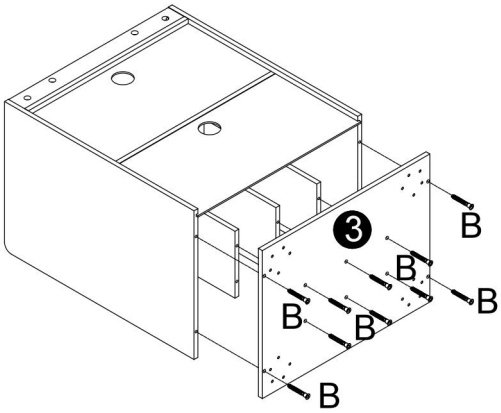

8

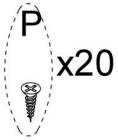

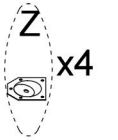

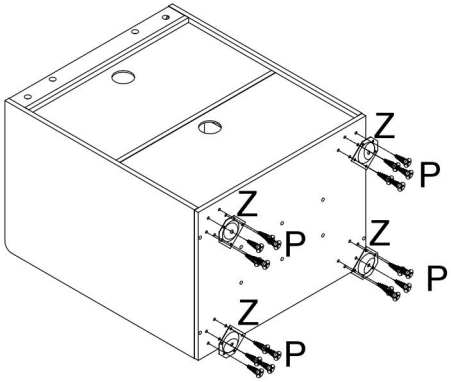

9

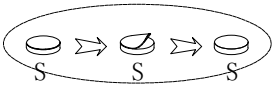

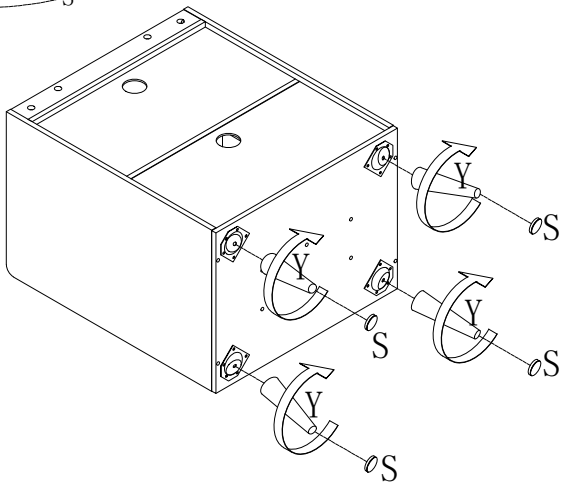

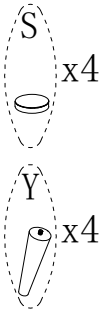

10

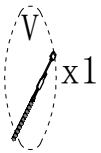

Please remove the blue protective film on the lights trip and keep the white tape.

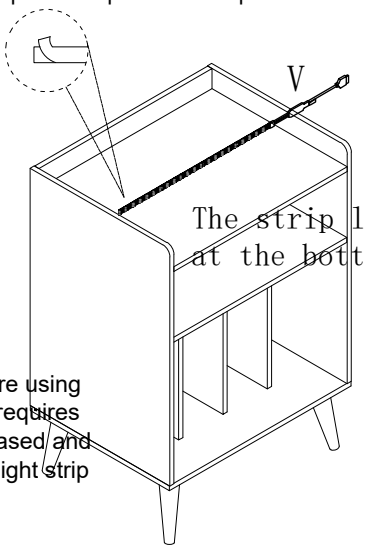

The strip light is installed at the bottom of the board



Remove the plastic piece before using the remote，This battery box requires additional batteries to be purchased and installed.And connected to the light strip through USB interface

11

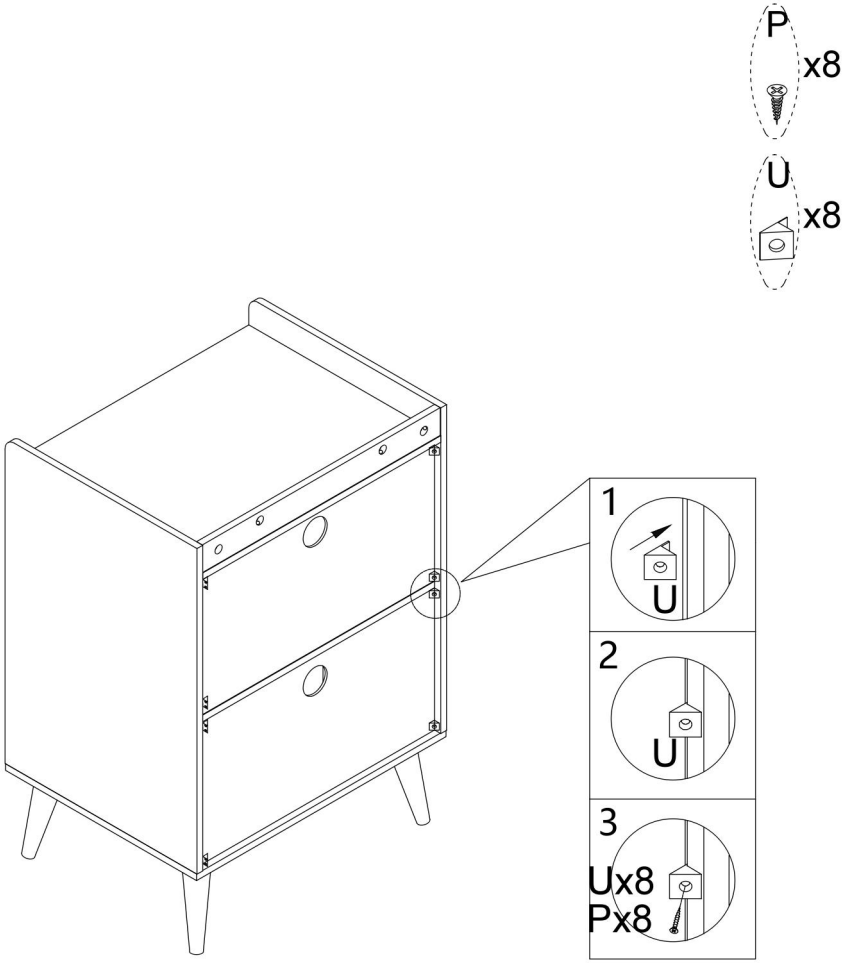

COMPLETION

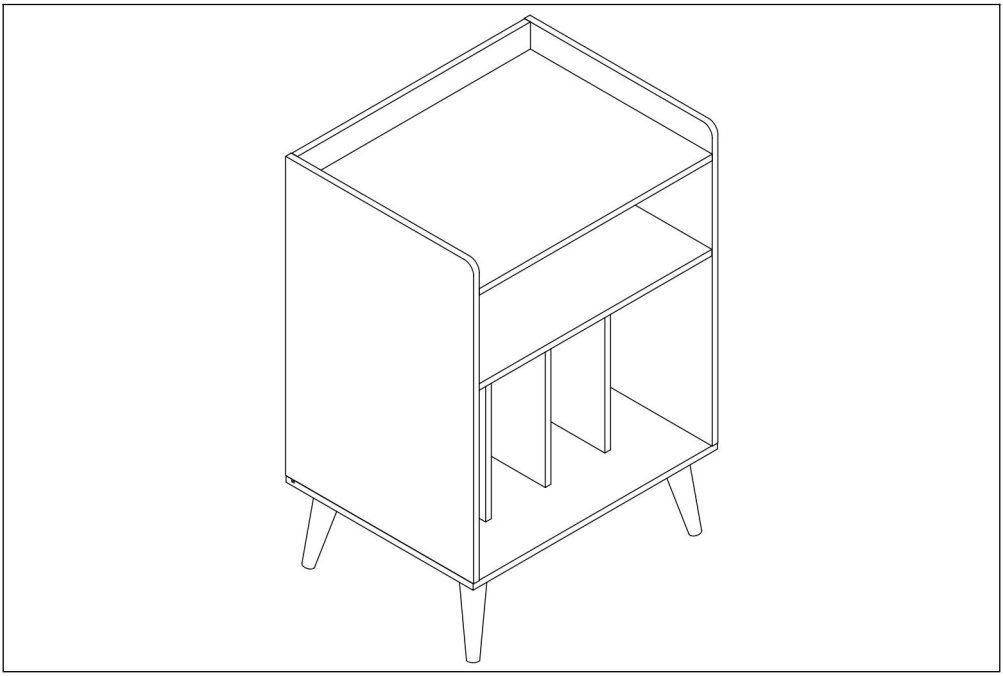



Correct Disposal

This product is subject to the provision of european Directive 2012/19/EU. The symbol showing a wheelie bin crossed through indicates that the product requires separate refuse collection in the European Union. This applies to the product and all accessories marked with this symbol. Products marked as such may not be discarded with normal domestic waste, but must be taken to acollection point for recycling electrical and electronic devices.

Manufacturer: Guangzhou Dingxin Office Furniture Co., LTD
Address: No. 1700, Renhe Road, Aotou Town, Conghua District, Guangzhou
E-mail: support@vevor.com



VEVOR

Upgrade · The Home Creator Way

RECORD PLAYER STAND RACK

USER MANUAL

MODEL NO.: C240353G-02

VEVOR
Upgrade · The Home Creator Way

Record Player Stand Rack

MODEL NO.: C240353G-02

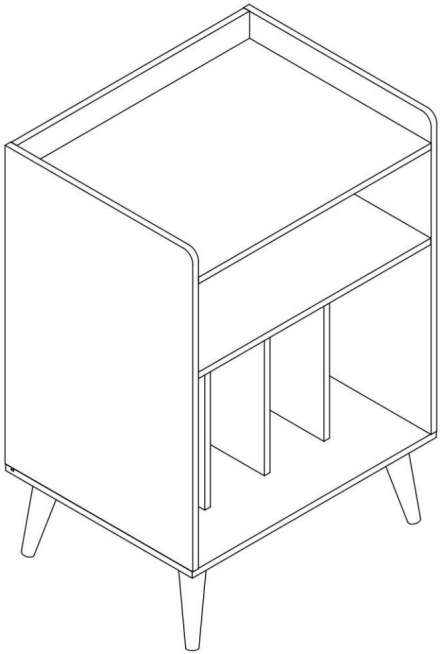

This is the original instruction, please read all manual instructions carefully before operating. VEVOR reserves a clear interpretation of our user manual. The appearance of the product shall be subject to the product you received. Please forgive us that we won't inform you again if there are any technology or software updates on our product.

⚠ WARNING:

Please read this manual carefully before using the product. Failure to do so may result in serious injury.

1. Le produit est conforme aux normes et réglementations en vigueur.
L'installation de cet appareil doit être conforme à la réglementation en vigueur et son utilisation doit se faire uniquement dans des endroits bien ventilés. Veuillez lire attentivement le manuel d'utilisation avant d'installer et d'utiliser cet équipement.
2. Cet appareil n'est pas destiné à être utilisé par des personnes (y compris les enfants) dont les capacités physiques, sensorielles ou mentales sont réduites, ou qui manquent d'expérience et de connaissances, à moins qu'elles n'aient reçu la surveillance ou les instructions d'une personne responsable de leur sécurité concernant l'utilisation de l'appareil.

3. Les enfants ne doivent pas jouer avec les produits.
4. Ce produit ne doit pas être utilisé par des enfants. Gardez l'appareil et son cordon hors de portée des enfants.
5. Cet appareil est destiné à être utilisé dans des applications domestiques et similaires telles que :
- les espaces cuisine du personnel dans les magasins, les bureaux et autres environnements de travail ;
- maisons de ferme ;
- par les clients dans les hôtels, les motels et autres environnements résidentiels ;
- des environnements de type chambres d'hôtes.
6. Veuillez conserver le produit correctement. Vérifiez son état avant utilisation. En cas d'anomalie, cessez immédiatement l'utilisation.
7. Veuillez utiliser le produit conformément à son usage prévu et prendre connaissance des risques de blessures liés à une mauvaise utilisation.
8. Si le cordon d'alimentation est endommagé, il doit être remplacé par un cordon ou un ensemble spécial disponible auprès du fabricant ou de son agent de service.

ASSEMBLY PRECAUTIONS

1. Assemble only according to these instructions. Improper assembly can create hazards.

2. Wear ANSI-approved safety goggles and heavy-duty work gloves during assembly.

3. Keep the assembly area clean and well-lit.

4. Keep bystanders out of the area during assembly.

5. Do not assemble when tired or when under the influence of alcohol, drugs or medication.

6. The product capabilities apply to properly and completely assembled products only.

7. Assemble on a flat, level, hard and smooth surface capable of safely supporting the Record Player Stand Rack.

8. For additional information regarding the parts listed in the following pages, please refer to the Assembly Diagram of this manual. Unwrap and separate all parts in a clean work area.

SAVE THESE INSTRUCTIONS

USE PRECAUTIONS

TO PREVENT SERIOUS INJURY AND DEATH FROM TIPPING:

1. This product is not a toy. Do not allow children to play with or near this item.

2. Do not exceed weight capacities before moving.

3. Use only on a flat, hard and smooth surface capable of safely supporting a fully loaded Record Player Stand Rack.

4. Use as intended only.

5. Inspect before every use; do not use if parts are loose or damaged.

TECHNICAL SPECIFICATIONS

Model	C240353G-02
Rating(s)	220-240 Vca, 50/60 Hz, 10 A
Product Dimensions (LxWxH)(mm)	520*400*750
Net Weight(kg)	About 12.35

*Products such as specifications, appearance, and design are subject to modification without prior notice.

PARTS LIST

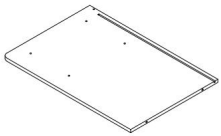

1 pièce

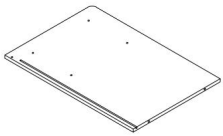

2 pièces

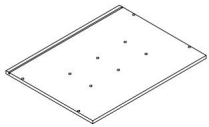

3 pièces

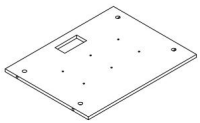

4 pc



5 pièce

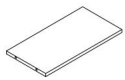

6 pièces de 3

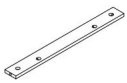

7 pièces

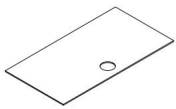

8 pièces



9 pièces

Liste des pièces et du matériel

UN 18 pcs	 M7*50/MM B 10 pièces	 C 18 pcs	 M3,5 x 12 mm P 30 pièces	 S 4 pièces	 8 pièces	 Dans 1 pièce
 X 1 pièce	 ET 4 pièces	 AVEC 4 pièces				

ASSEMBLY STEPS

12

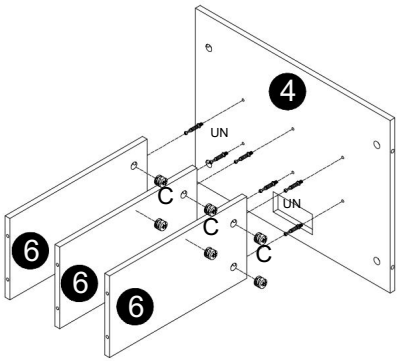

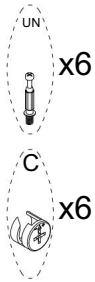

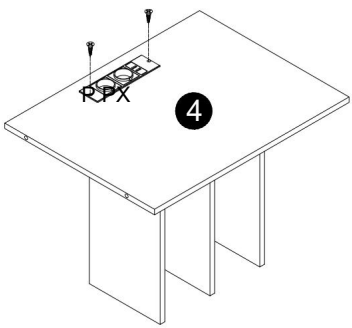

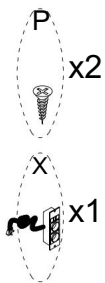

3

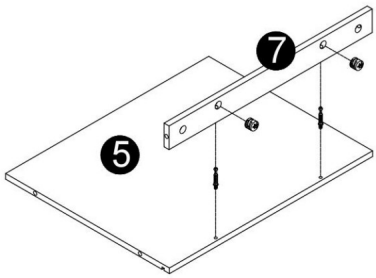

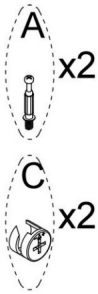

4

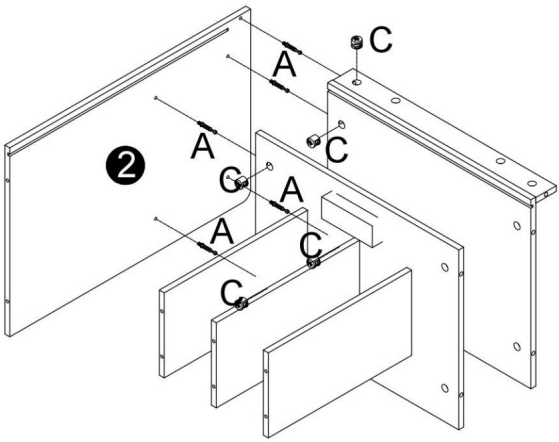

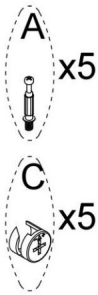

5

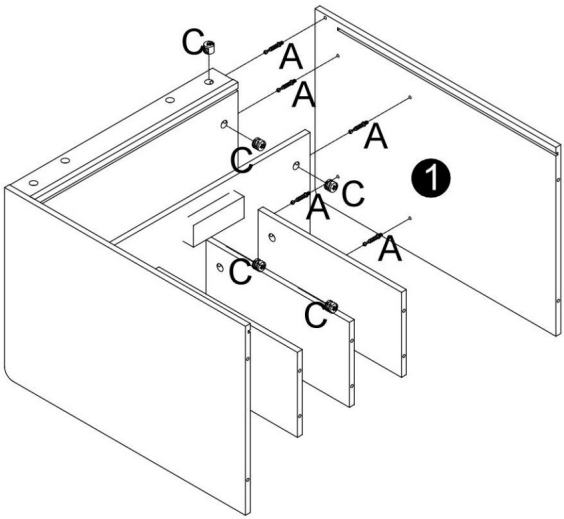

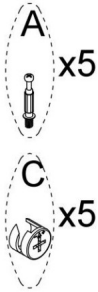

6

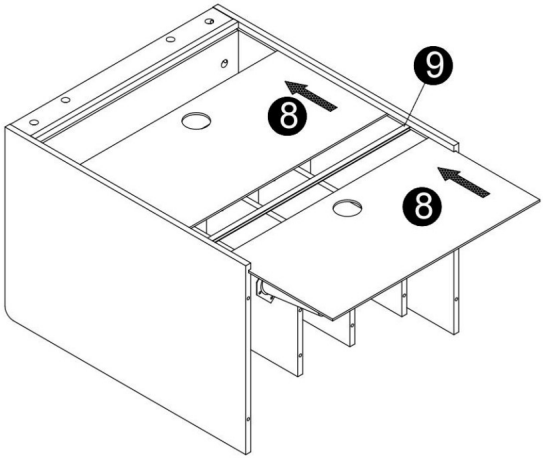

7

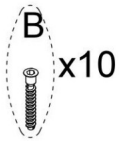

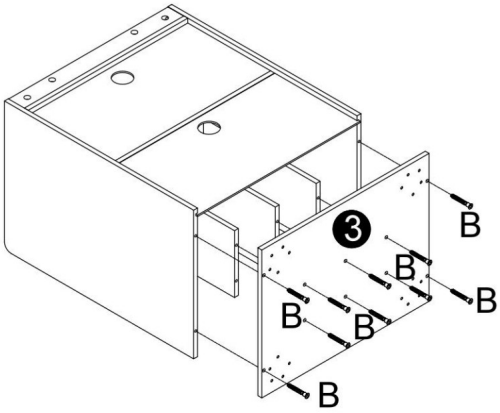

8

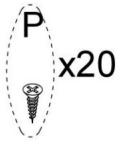

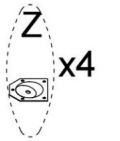

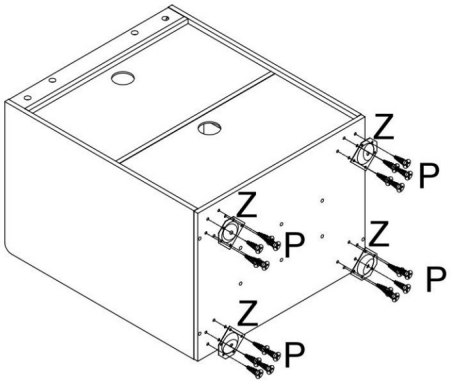

9

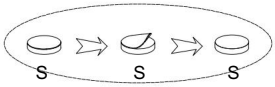

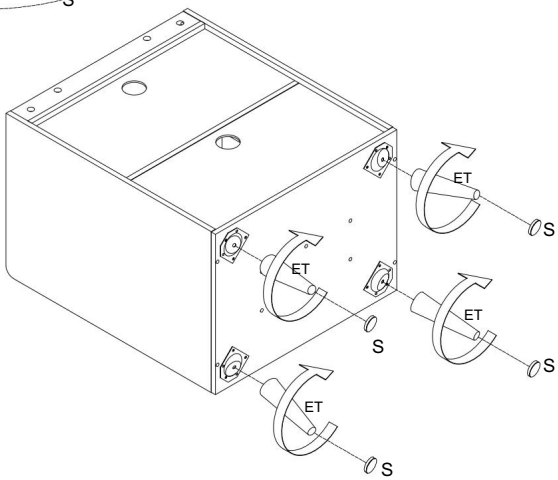

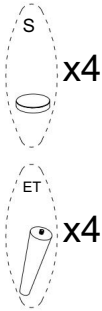

10

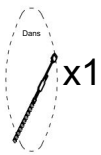

Veuillez retirer le film protecteur bleu du circuit lumineux et conserver le ruban adhésif blanc.

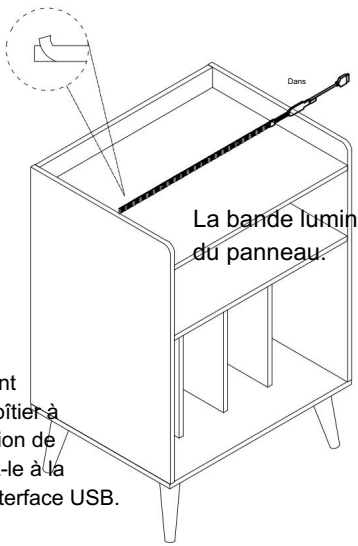

La bande lumineuse est installée en bas du panneau.



Retirez la pièce en plastique avant d'utiliser la télécommande. Ce boîtier à piles nécessite l'achat et l'installation de piles supplémentaires. Connectez-le à la bande lumineuse via l'interface USB.

11

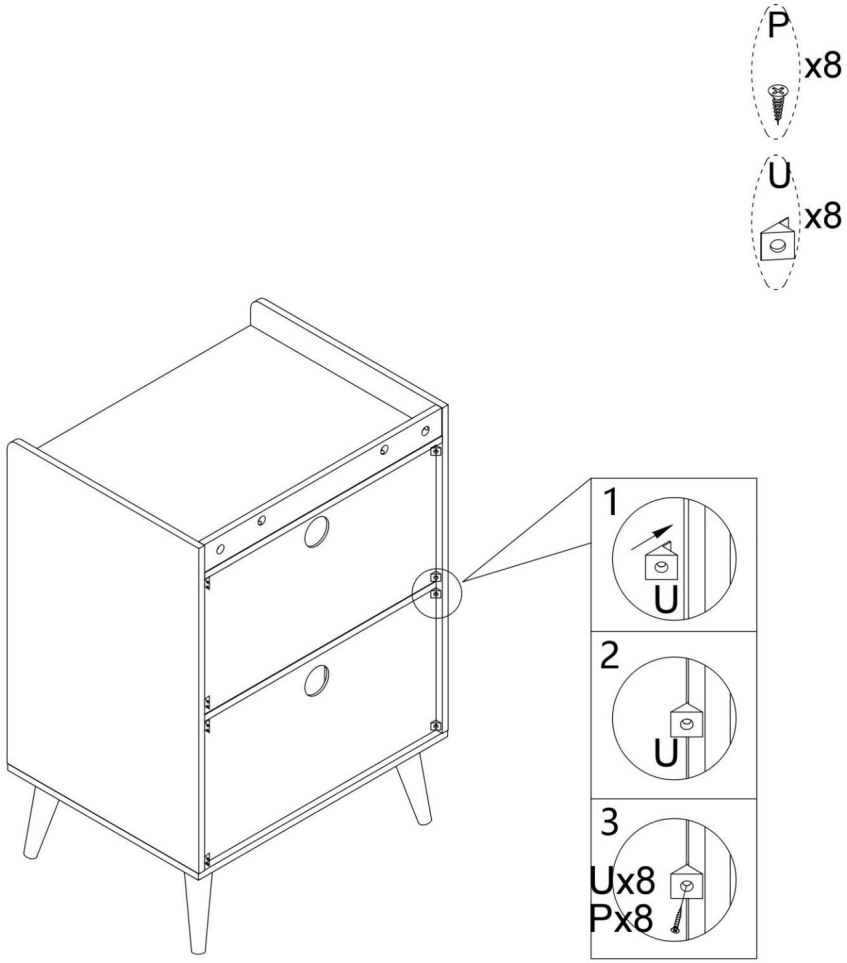

COMPLETION

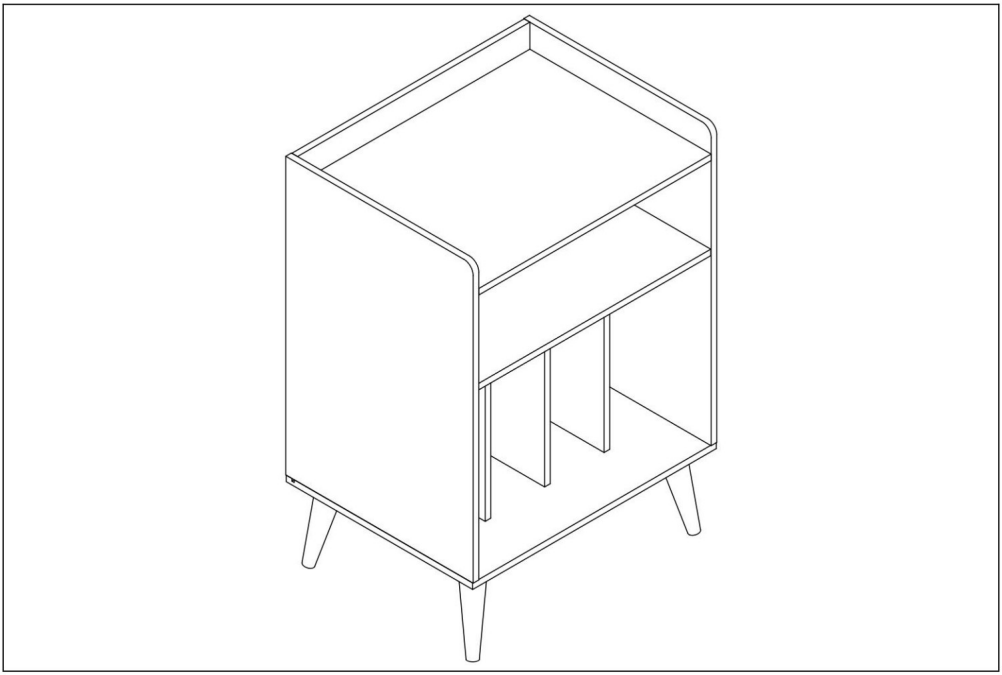



Élimination correcte

Ce produit est soumis aux dispositions de la directive européenne 2012/19/UE.

Le symbole représentant une poubelle barrée indique que le produit doit être collecté séparément des ordures ménagères dans l'Union européenne. Ceci s'applique au produit et à tous les accessoires portant ce symbole. Les produits ainsi marqués ne doivent pas être jetés avec les ordures ménagères ordinaires, mais doivent être déposés dans un point de collecte pour le recyclage des équipements électriques et électroniques (EEED).

Fabricant : Guangzhou Dingxin Office Furniture Co., LTD
Adresse : n° 1700, route de Renhe, ville d'Aotou, district de Conghua,
Adresse
électronique de Guangzhou : support@vevor.com



VEVOR

Upgrade · The Home Creator Way

RECORD PLAYER STAND RACK

USER MANUAL

MODEL NO.: C240353G-02

VEVOR
Upgrade·The Home Creator Way

Record Player Stand Rack

MODEL NO.: C240353G-02

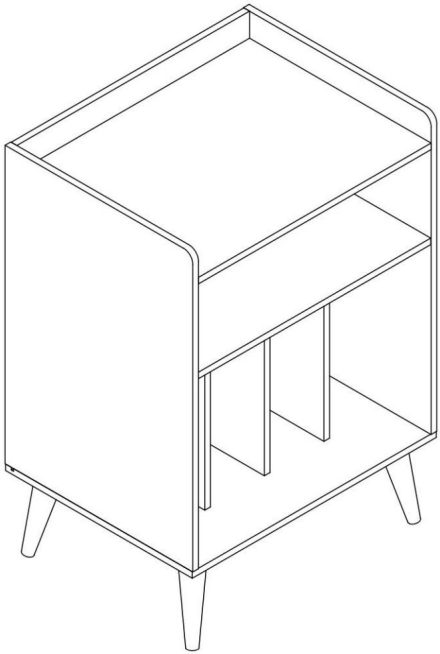

This is the original instruction, please read all manual instructions carefully before operating. VEVOR reserves a clear interpretation of our user manual. The appearance of the product shall be subject to the product you received. Please forgive us that we won't inform you again if there are any technology or software updates on our product.

⚠ WARNING:

Please read this manual carefully before using the product. Failure to do so may result in serious injury.

1. Das Produkt entspricht den einschlägigen Normen und Vorschriften.
Die Installation dieses Geräts muss allen geltenden Vorschriften entsprechen und es darf nur in gut belüfteten Bereichen betrieben werden. Bitte lesen Sie die Bedienungsanleitung vor der Installation und Inbetriebnahme des Geräts.
2. Dieses Gerät ist nicht für die Verwendung durch Personen (einschließlich Kinder) mit eingeschränkten physischen, sensorischen oder geistigen Fähigkeiten oder mangelnder Erfahrung und Kenntnis bestimmt, es sei denn, sie werden von einer für ihre Sicherheit verantwortlichen Person beaufsichtigt oder in die Verwendung des Geräts eingewiesen.

3. Kinder dürfen nicht mit den Erzeugnissen spielen.
4. Dieses Produkt darf nicht von Kindern benutzt werden. Bewahren Sie das Gerät und sein Netzkabel außerhalb der Reichweite von Kindern auf.
5. Dieses Gerät ist für den Einsatz im Haushalt und in ähnlichen Anwendungen vorgesehen, wie zum Beispiel:
- Personalküchen in Geschäften, Büros und anderen Arbeitsumgebungen;

- Bauernhäuser;
- von Kunden in Hotels, Motels und anderen Wohnumgebungen;
- Unterkünfte im Stil von Bed & Breakfast.
6. Bitte bewahren Sie das Produkt ordnungsgemäß auf. Prüfen Sie vor Gebrauch, ob das Produkt Mängel aufweist. Sollte es Mängel aufweisen, stellen Sie die Verwendung bitte ein.
7. Bitte verwenden Sie das Produkt nur gemäß dem vorgesehenen Verwendungszweck. Wir weisen auf mögliche Verletzungen durch unsachgemäße Verwendung hin.
8. Ist das Netzkabel beschädigt, muss es durch ein spezielles Netzkabel oder eine spezielle Baugruppe ersetzt werden, die vom Hersteller oder dessen Servicepartner erhältlich ist.

ASSEMBLY PRECAUTIONS

1. Assemble only according to these instructions. Improper assembly can create hazards.

2. Wear ANSI-approved safety goggles and heavy-duty work gloves during assembly.

3. Keep the assembly area clean and well-lit.

4. Keep bystanders out of the area during assembly.

5. Do not assemble when tired or when under the influence of alcohol, drugs or medication.

6. The product capabilities apply to properly and completely assembled products only.

7. Assemble on a flat, level, hard and smooth surface capable of safely supporting the Record Player Stand Rack.

8. For additional information regarding the parts listed in the following pages, please refer to the Assembly Diagram of this manual. Unwrap and separate all parts in a clean work area.

SAVE THESE INSTRUCTIONS

USE PRECAUTIONS

TO PREVENT SERIOUS INJURY AND DEATH FROM TIPPING:

1. This product is not a toy. Do not allow children to play with or near this item.

2. Do not exceed weight capacities before moving.

3. Use only on a flat, hard and smooth surface capable of safely supporting a fully loaded Record Player Stand Rack.

4. Use as intended only.

5. Inspect before every use; do not use if parts are loose or damaged.

TECHNICAL SPECIFICATIONS

Model	C240353G-02
Rating(s)	220–240 V Wechselstrom, 50/60 Hz, 10 A
Product Dimensions (LxWxH)(mm)	520*400*750
Net Weight(kg)	About 12.35

*Products such as specifications, appearance, and design are subject to modification without prior notice.

PARTS LIST

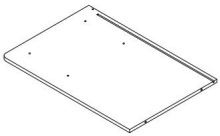

1 Stück

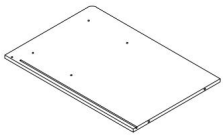

2 Stück

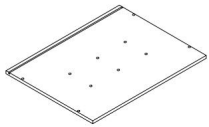

3 Stück

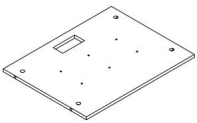

4 Stück



5 Stück

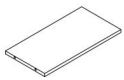

6 Stück

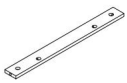

7 Stück

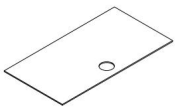

8 Stück



9 Stück

Teile- und Hardwareliste

A	M7x50 mm B	 C	M3,5 x 12 mm P	S	 IN	 In
18 Stück	10 Stück	18 Stück	30 Stück	4 Stück	8 Stück	1 Stück
 X	 UND	 MIT				
1 Stück	4 Stück	4 Stück				

ASSEMBLY STEPS

12

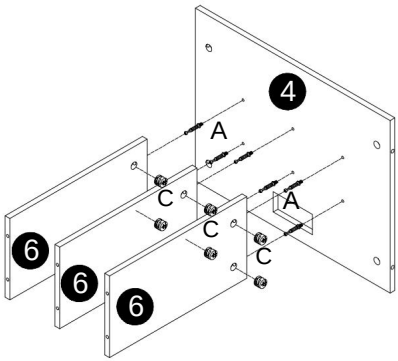

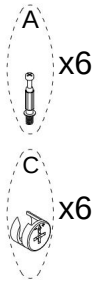

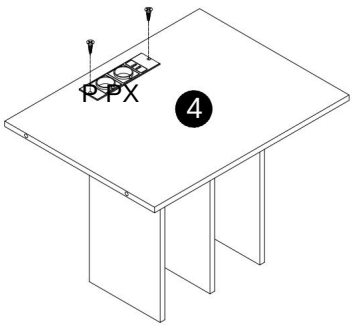

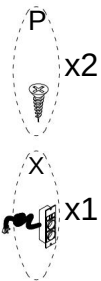

3

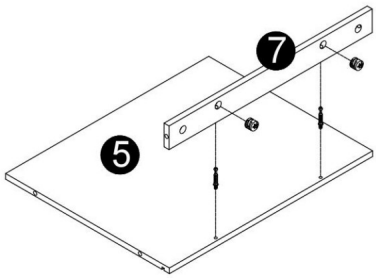

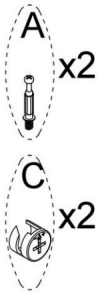

4

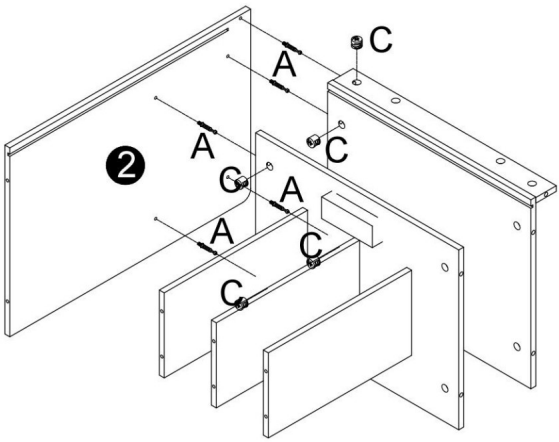

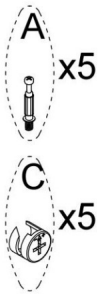

5

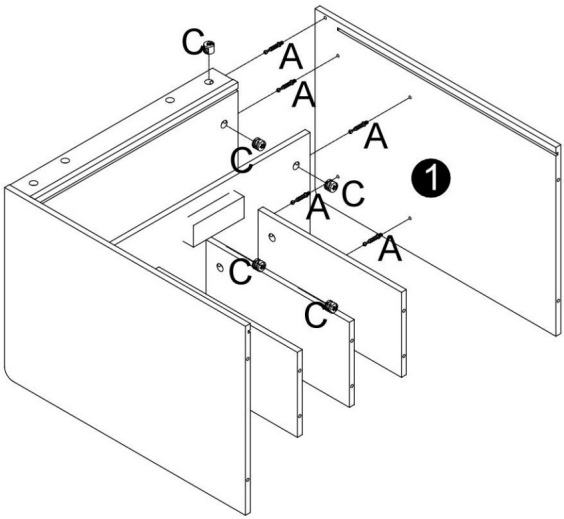

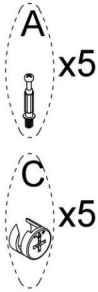

6

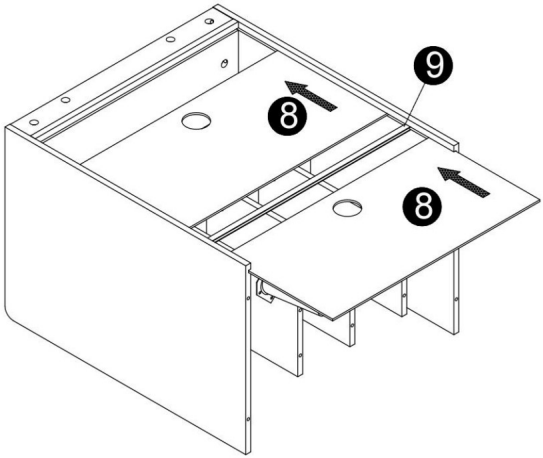

7

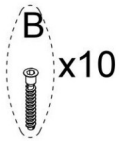

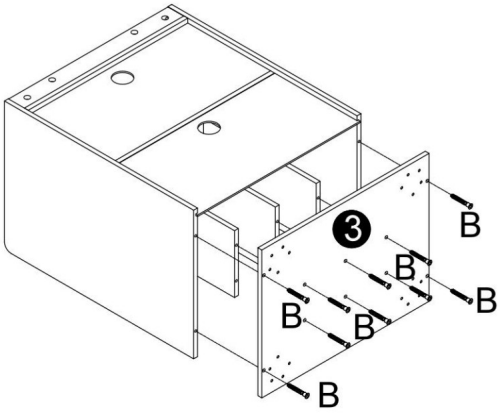

8

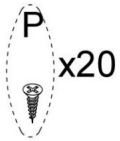

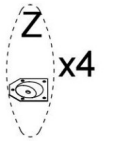

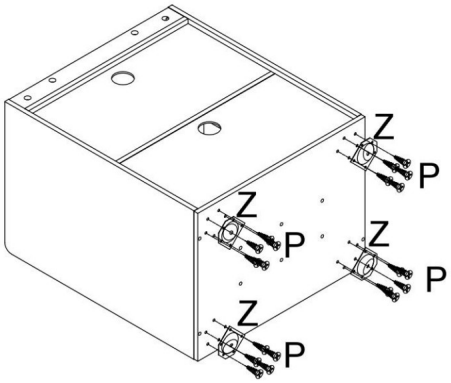

9

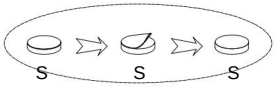

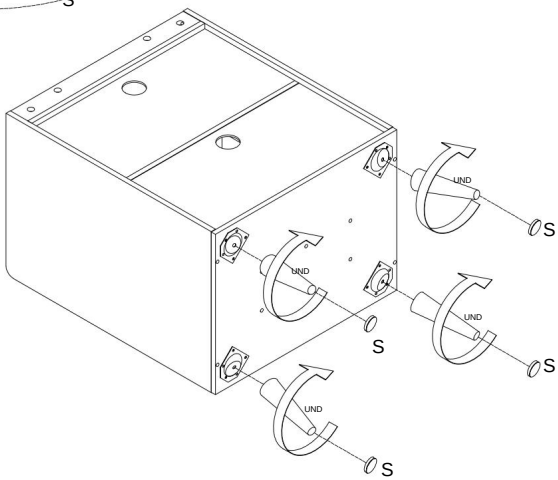



x4



x4

10



x1

Bitte entfernen Sie die blaue Schutzfolie von der Lichtleiste und bewahren Sie das weiße Klebeband auf.

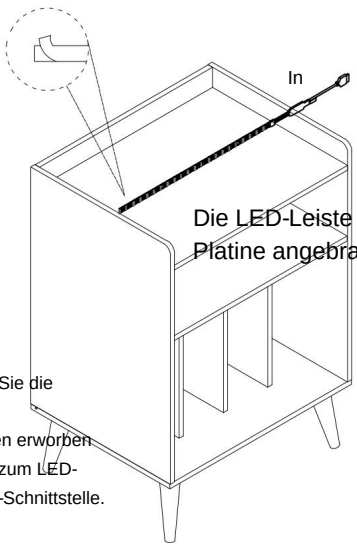

Die LED-Leiste ist an der Unterseite der Platine angebracht.



Entfernen Sie das Kunststoffteil, bevor Sie die Fernbedienung verwenden. Für dieses Batteriefach müssen zusätzliche Batterien erworben und eingesetzt werden. Die Verbindung zum LED-Streifen erfolgt über die USB-Schnittstelle.

11

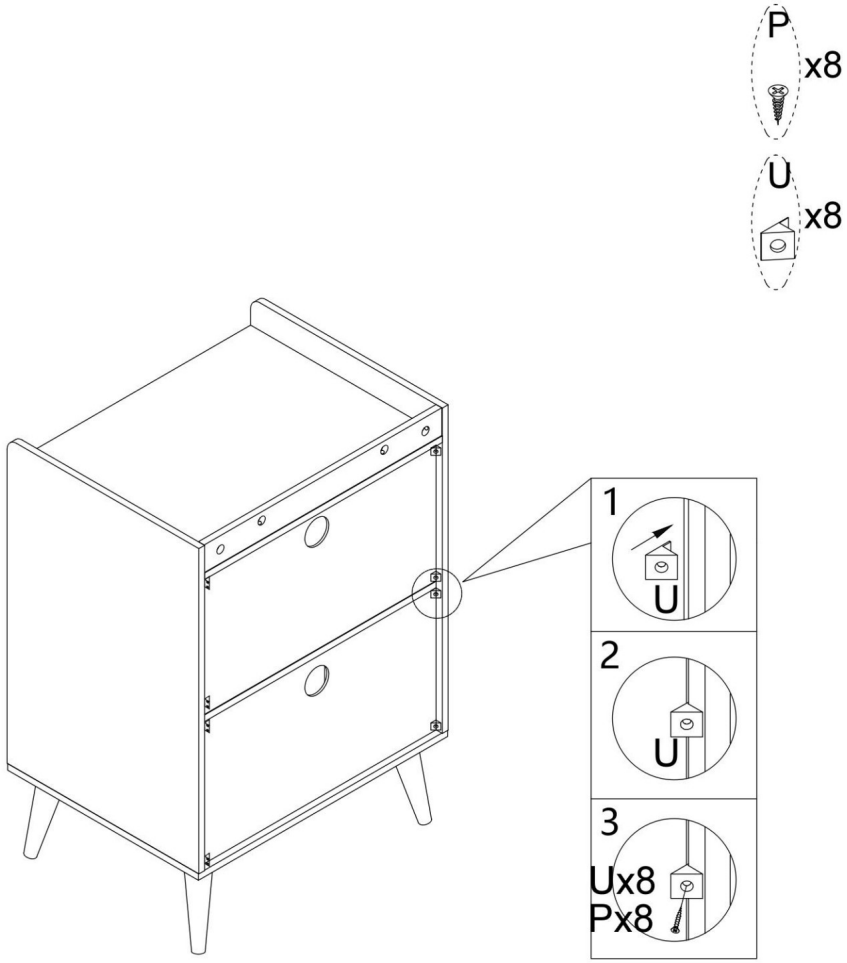

COMPLETION

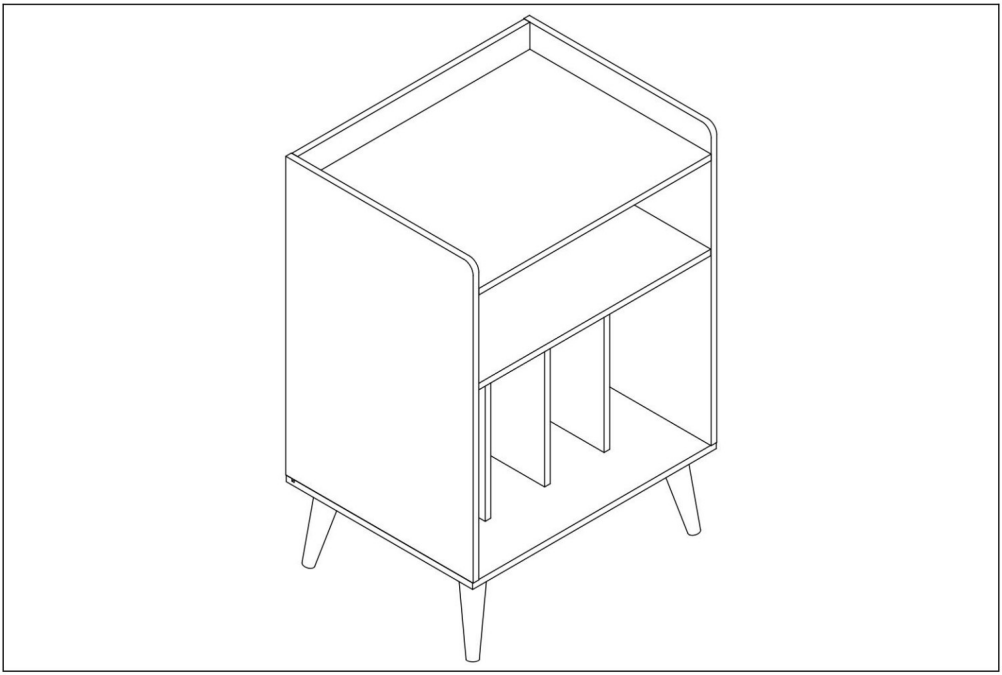



Korrekte Entsorgung

Dieses Produkt unterliegt den Bestimmungen der europäischen Richtlinie 2012/19/EU. Das Symbol einer durchgestrichenen Mülltonne bedeutet, dass dieses Produkt in der Europäischen Union separat entsorgt werden muss. Dies gilt für das Produkt und sämtliches Zubehör, das mit diesem Symbol gekennzeichnet ist. Solche Produkte dürfen nicht im normalen Hausmüll entsorgt werden, sondern müssen zu einer Sammelstelle für das Recycling von Elektro- und Elektronikgeräten gebracht werden.

Hersteller: Guangzhou Dingxin Office Furniture Co., LTD
Adresse: Nr. 1700, Renhe Straße, Aotou Stadt, Bezirk Conghua, Guangzhou
E-Mail: support@vevor.com



VEVOR

Upgrade · The Home Creator Way

RECORD PLAYER STAND RACK

USER MANUAL

MODEL NO.: C240353G-02

VEVOR
Upgrade·The Home Creator Way

Record Player Stand Rack

MODEL NO.: C240353G-02

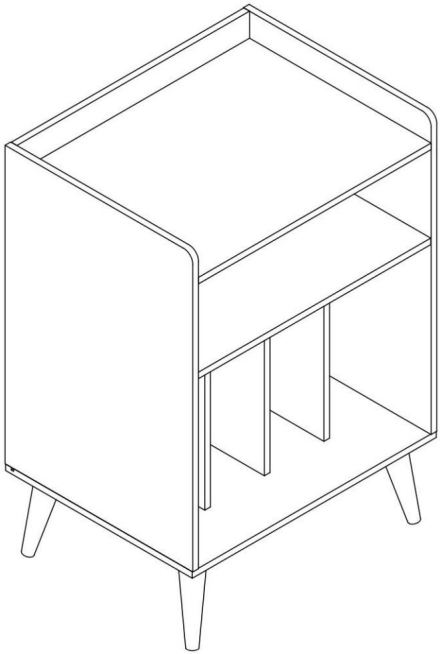

This is the original instruction, please read all manual instructions carefully before operating. VEVOR reserves a clear interpretation of our user manual. The appearance of the product shall be subject to the product you received. Please forgive us that we won't inform you again if there are any technology or software updates on our product.

⚠ WARNING:

Please read this manual carefully before using the product. Failure to do so may result in serious injury.

1. Il prodotto è conforme agli standard e alle normative pertinenti.
L'installazione di questo dispositivo deve essere conforme a tutte le normative vigenti e il suo utilizzo deve avvenire esclusivamente in ambienti ben ventilati. Si prega di leggere il manuale d'uso prima di installare e utilizzare l'apparecchiatura.
2. Questo apparecchio non è destinato all'uso da parte di persone (compresi i bambini) con ridotte capacità fisiche, sensoriali o mentali, o prive di esperienza e conoscenza, a meno che non siano state supervisionate o istruite sull'uso dell'apparecchio da una persona responsabile della loro sicurezza.

3. I bambini non devono giocare con i prodotti.
4. Questo prodotto non deve essere utilizzato dai bambini. Tenere l'apparecchio e il relativo cavo fuori dalla portata dei bambini.
5. Questo apparecchio è destinato all'uso in ambito domestico e in applicazioni simili, quali:
- aree cucina per il personale in negozi, uffici e altri ambienti di lavoro;

- case coloniche;
- da clienti in hotel, motel e altri ambienti di tipo residenziale;
- Ambienti di tipo bed and breakfast.
6. Conservare il prodotto in modo appropriato. Prima dell'uso, verificare che il prodotto non presenti anomalie. In caso di anomalie, interromperne l'utilizzo.
7. Si prega di utilizzare il prodotto secondo le istruzioni d'uso previste; si sconsiglia l'uso improprio per evitare potenziali lesioni.
8. Se il cavo di alimentazione è danneggiato, deve essere sostituito con un cavo o un gruppo di cavi speciale disponibile presso il produttore o il suo agente di assistenza.

ASSEMBLY PRECAUTIONS

1. Assemble only according to these instructions. Improper assembly can create hazards.

2. Wear ANSI-approved safety goggles and heavy-duty work gloves during assembly.

3. Keep the assembly area clean and well-lit.

4. Keep bystanders out of the area during assembly.

5. Do not assemble when tired or when under the influence of alcohol, drugs or medication.

6. The product capabilities apply to properly and completely assembled products only.

7. Assemble on a flat, level, hard and smooth surface capable of safely supporting the Record Player Stand Rack.

8. For additional information regarding the parts listed in the following pages, please refer to the Assembly Diagram of this manual. Unwrap and separate all parts in a clean work area.

SAVE THESE INSTRUCTIONS

USE PRECAUTIONS

TO PREVENT SERIOUS INJURY AND DEATH FROM TIPPING:

1. This product is not a toy. Do not allow children to play with or near this item.

2. Do not exceed weight capacities before moving.

3. Use only on a flat, hard and smooth surface capable of safely supporting a fully loaded Record Player Stand Rack.

4. Use as intended only.

5. Inspect before every use; do not use if parts are loose or damaged.

TECHNICAL SPECIFICATIONS

Model	C240353G-02
Rating(s)	220-240 V CA, 50/60 Hz, 10 A
Product Dimensions (LxWxH)(mm)	520*400*750
Net Weight(kg)	About 12.35

*Products such as specifications, appearance, and design are subject to modification without prior notice.

PARTS LIST

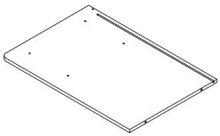

1 1 pz

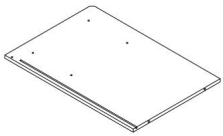

2 1 pz

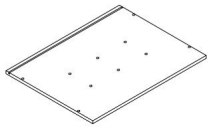

3 1 pz

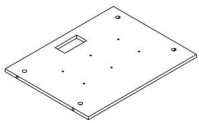

4 1 pz



5 1 pz

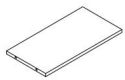

6 8 pezzi

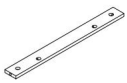

7 1 pz

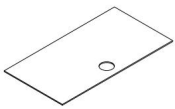

8 2 pezzi



9 1 pz

Elenco dei componenti e della ferramenta

UN 18 pollici	 B 10 pezzi	 C 18 pollici	 P 30 pezzi	S 4 pezzi	 IN 8 pezzi	 In 1 pz
 X 1 pz	 E 4 pezzi	 CON 4 pezzi				

ASSEMBLY STEPS

12

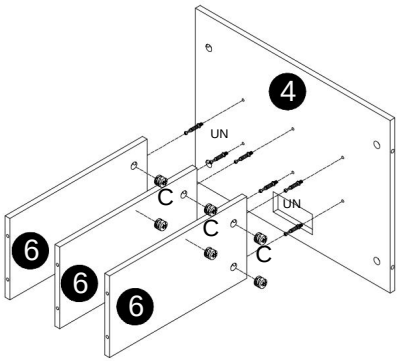

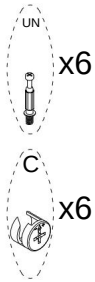

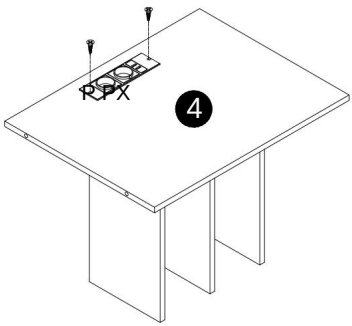

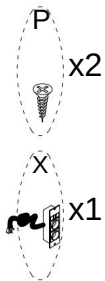

3

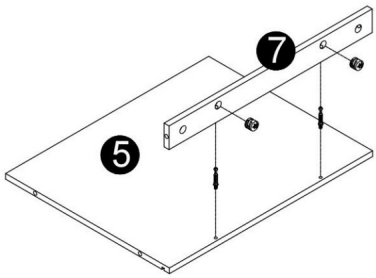

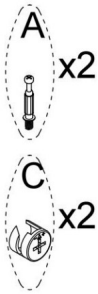

4

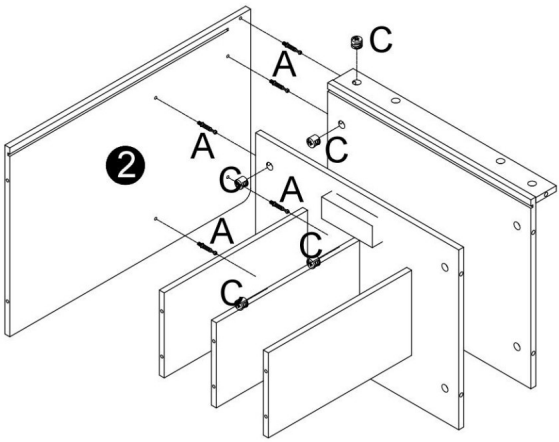

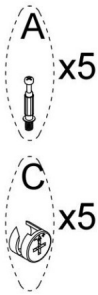

5

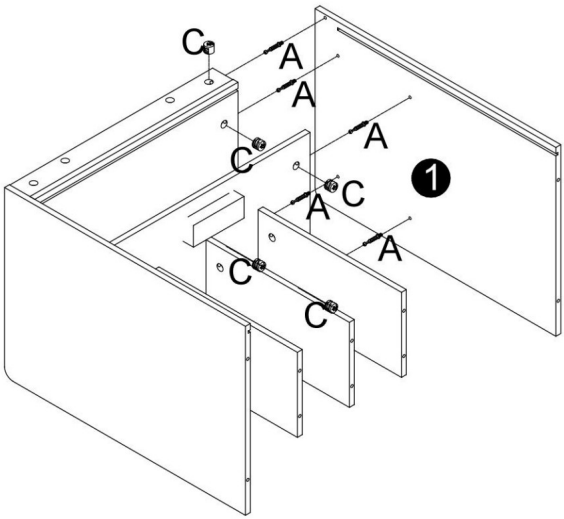

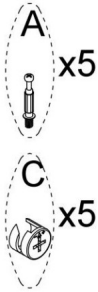

6

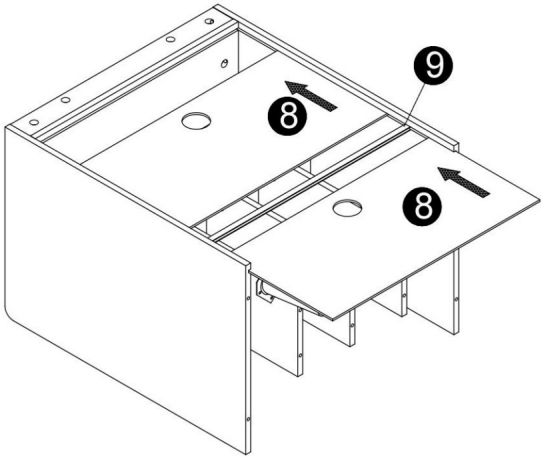

7

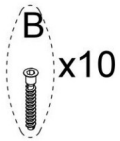

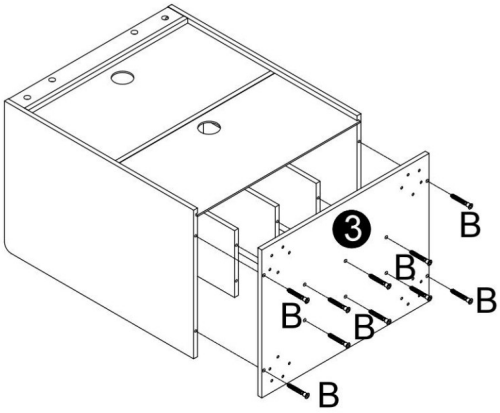

8

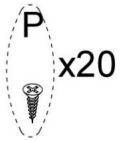

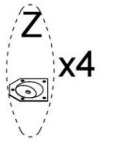

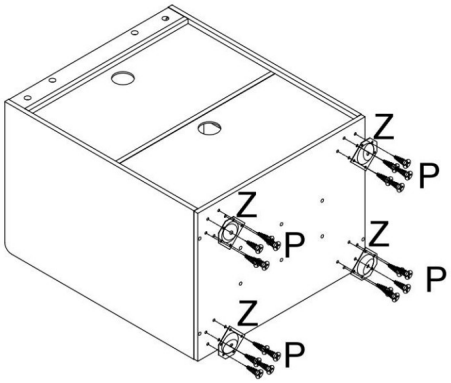

9

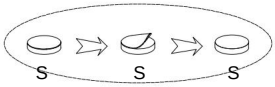

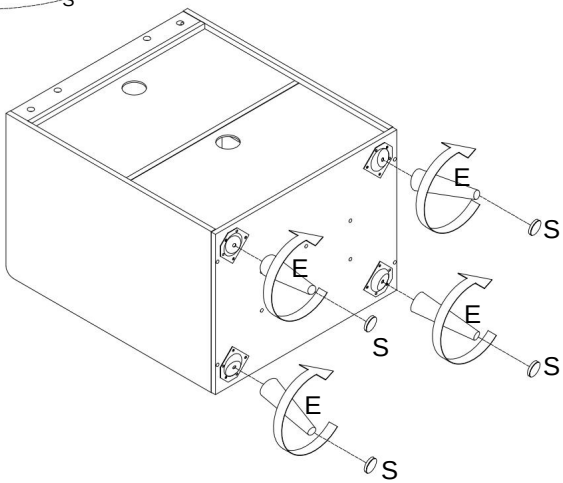

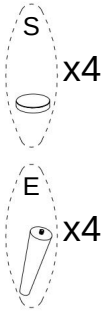

10

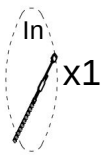

Si prega di rimuovere la pellicola protettiva blu dal interruttore della luce e di conservare il nastro adesivo bianco.

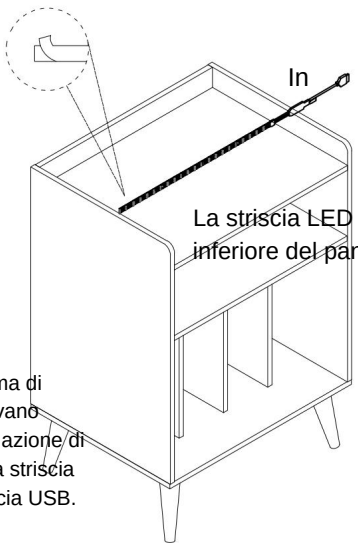

La striscia LED è installata nella parte inferiore del pannello



Rimuovere il pezzo di plastica prima di utilizzare il telecomando. Questo vano batterie richiede l'acquisto e l'installazione di batterie aggiuntive. E si collega alla striscia luminosa tramite interfaccia USB.

11

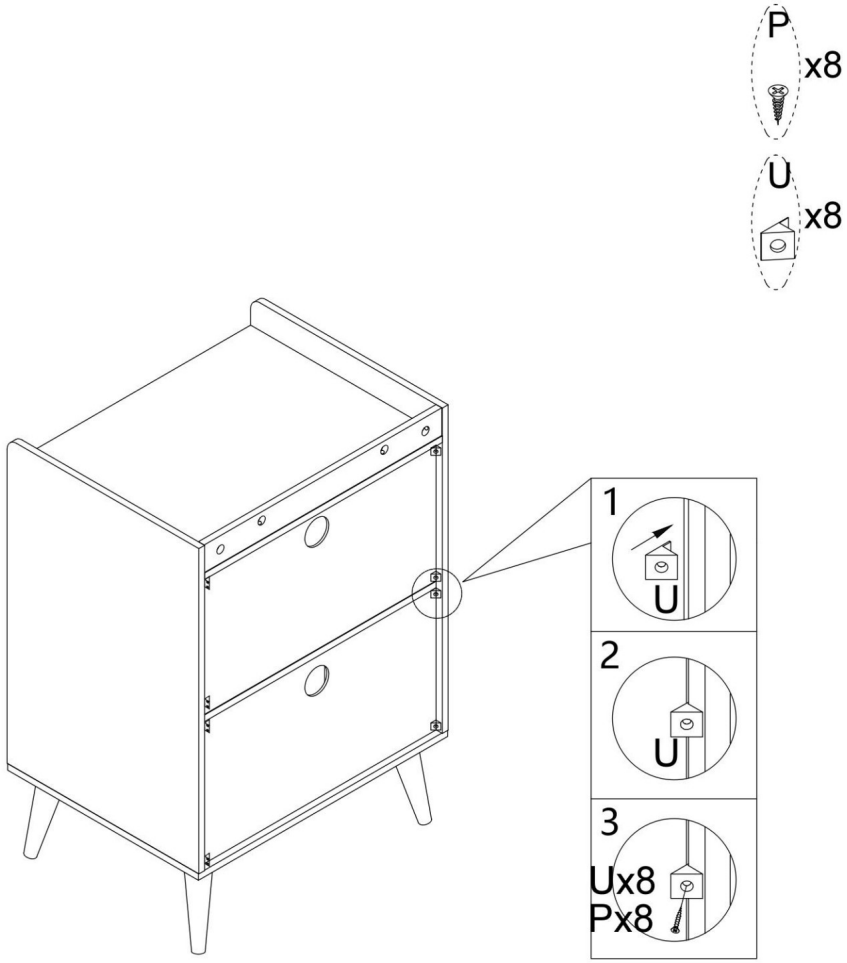

COMPLETION

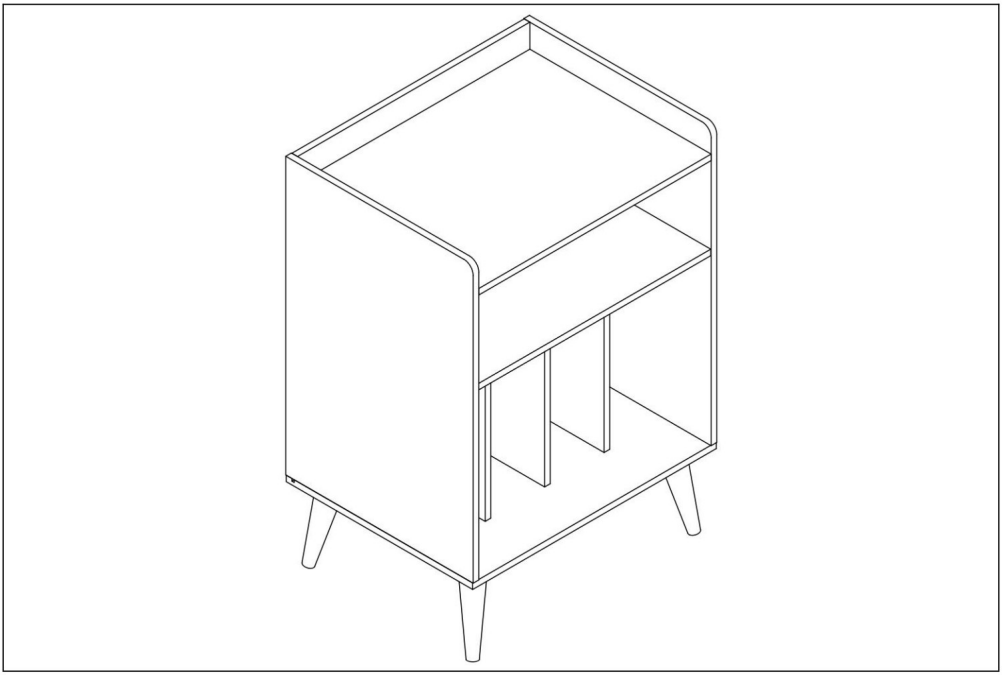



Corretto smaltimento.
Questo prodotto è soggetto alle disposizioni della Direttiva europea 2012/19/UE.
Il simbolo raffigurante un bidone della spazzatura barrato indica che il prodotto richiede la raccolta differenziata dei rifiuti nell'Unione Europea. Ciò si applica al prodotto e a tutti gli accessori contrassegnati con questo simbolo. I prodotti contrassegnati in questo modo non possono essere smaltiti con i normali rifiuti domestici, ma devono essere portati presso un punto di raccolta per il riciclaggio di apparecchiature elettriche ed elettroniche.

Produttore: Guangzhou Dingxin Office Furniture Co., LTD
Indirizzo: n. 1700, Renhe Road, Aotou Town, Distretto di Conghua, Guangzhou
E-mail: support@vevor.com



VEVOR

Upgrade · The Home Creator Way

RECORD PLAYER STAND RACK

USER MANUAL

MODEL NO.: C240353G-02

VEVOR
Upgrade · The Home Creator Way

Record Player Stand Rack

MODEL NO.: C240353G-02

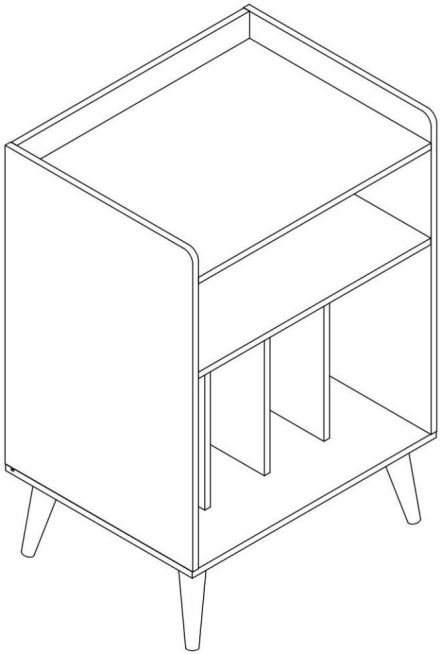

This is the original instruction, please read all manual instructions carefully before operating. VEVOR reserves a clear interpretation of our user manual. The appearance of the product shall be subject to the product you received. Please forgive us that we won't inform you again if there are any technology or software updates on our product.

⚠ WARNING:

Please read this manual carefully before using the product. Failure to do so may result in serious injury.

1. El producto cumple con las normas y reglamentos pertinentes.
La instalación de este dispositivo debe cumplir con todas las normativas aplicables y solo debe utilizarse en áreas bien ventiladas. Lea el manual de usuario antes de instalar y utilizar este equipo.
2. Este aparato no está diseñado para ser utilizado por personas (incluidos niños) con capacidades físicas, sensoriales o mentales reducidas, o falta de experiencia y conocimiento, a menos que hayan recibido supervisión o instrucciones sobre el uso del aparato por parte de una persona responsable de su seguridad.

3. Los niños no deben jugar con los productos.
4. Este producto no debe ser utilizado por niños. Mantenga el aparato y su cable fuera del alcance de los niños.
5. Este aparato está diseñado para ser utilizado en aplicaciones domésticas y similares, tales como:
- áreas de cocina para el personal en tiendas, oficinas y otros entornos laborales;

- casas de campo;
- por clientes en hoteles, moteles y otros entornos de tipo residencial;
- Ambientes tipo alojamiento y desayuno.
6. Por favor, conserve el producto adecuadamente. Compruebe si el producto presenta alguna anomalía antes de usarlo. Si detecta alguna anomalía, deje de usarlo.
7. Utilice el producto de acuerdo con el uso previsto; tenga en cuenta que un uso indebido puede causar lesiones.
8. Si el cable de alimentación está dañado, debe sustituirse por un cable o conjunto especial disponible en el fabricante o su agente de servicio.

ASSEMBLY PRECAUTIONS

1. Assemble only according to these instructions. Improper assembly can create hazards.

2. Wear ANSI-approved safety goggles and heavy-duty work gloves during assembly.

3. Keep the assembly area clean and well-lit.

4. Keep bystanders out of the area during assembly.

5. Do not assemble when tired or when under the influence of alcohol, drugs or medication.

6. The product capabilities apply to properly and completely assembled products only.

7. Assemble on a flat, level, hard and smooth surface capable of safely supporting the Record Player Stand Rack.

8. For additional information regarding the parts listed in the following pages, please refer to the Assembly Diagram of this manual. Unwrap and separate all parts in a clean work area.

SAVE THESE INSTRUCTIONS

USE PRECAUTIONS

TO PREVENT SERIOUS INJURY AND DEATH FROM TIPPING:

1. This product is not a toy. Do not allow children to play with or near this item.

2. Do not exceed weight capacities before moving.

3. Use only on a flat, hard and smooth surface capable of safely supporting a fully loaded Record Player Stand Rack.

4. Use as intended only.

5. Inspect before every use; do not use if parts are loose or damaged.

TECHNICAL SPECIFICATIONS

Model	C240353G-02
Rating(s)	220-240 V CA, 50/60 Hz, 10 A
Product Dimensions (LxWxH)(mm)	520*400*750
Net Weight(kg)	About 12.35

*Products such as specifications, appearance, and design are subject to modification without prior notice.

PARTS LIST

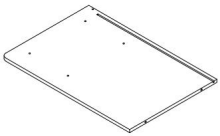

1 pieza

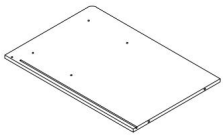

2 unidad

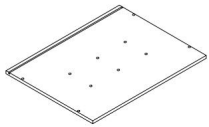

3 unidad

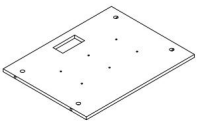

4 unidad



5 unidad

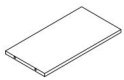

6 piezas

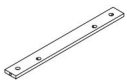

7 pieza

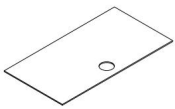

8 piezas



9 pieza

Lista de piezas y componentes

 A	 B	 do	 PAG	 S	 EN	 En
18 piezas	10 unidades	18 piezas	30 unidades	4 piezas	8 piezas	1 unidad
	 Y	 CON				
1 unidad	4 piezas	4 piezas				

ASSEMBLY STEPS

12

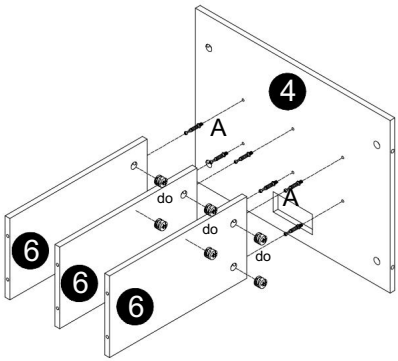



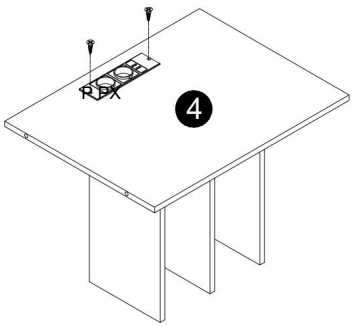

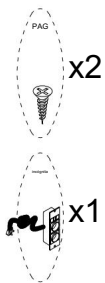

3

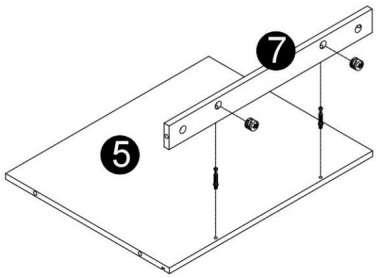

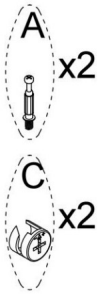

4

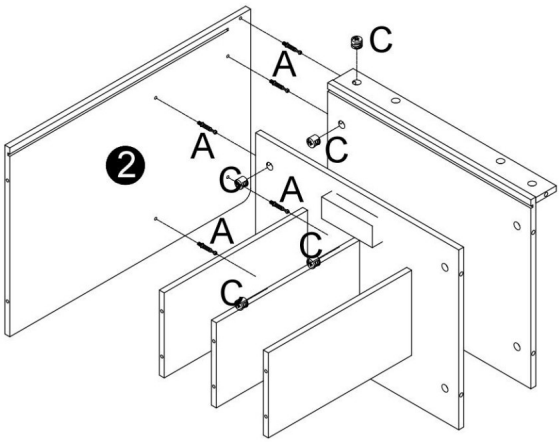

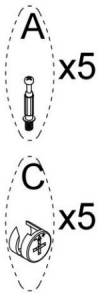

5

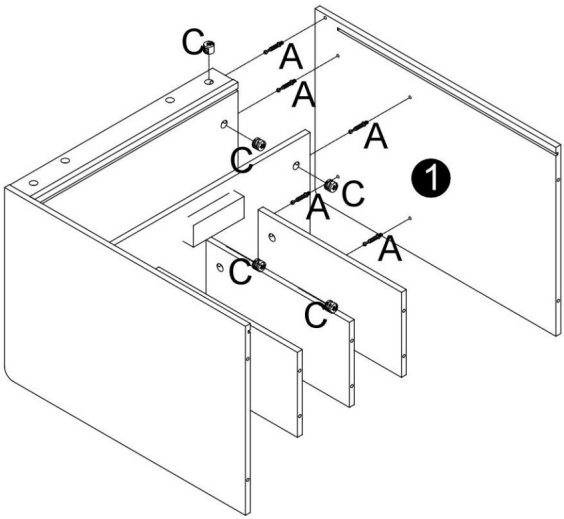

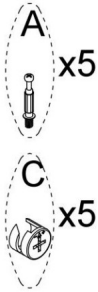

6

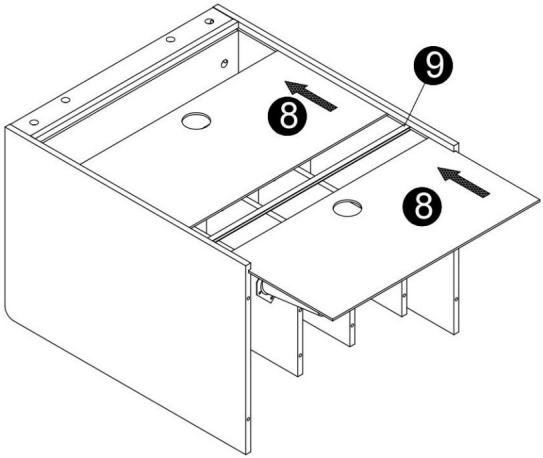

7

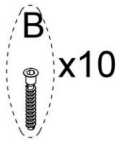

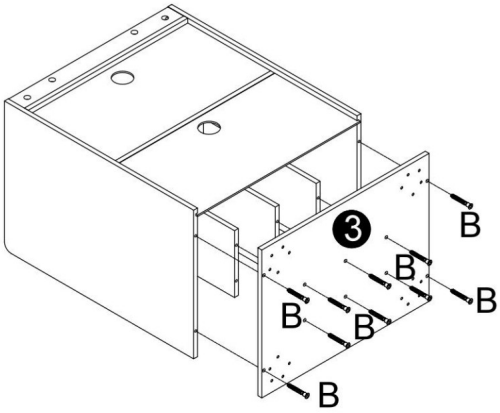

8

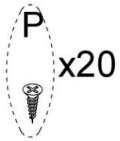

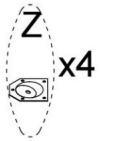

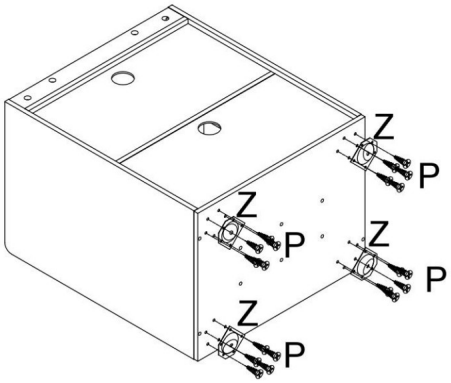

9

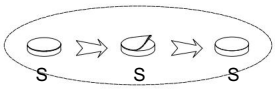

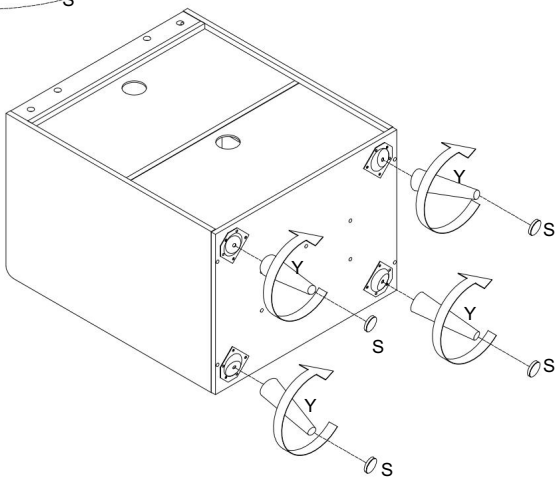



10

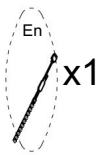

Retire la película protectora azul del tirador de luces y conserve la cinta blanca.

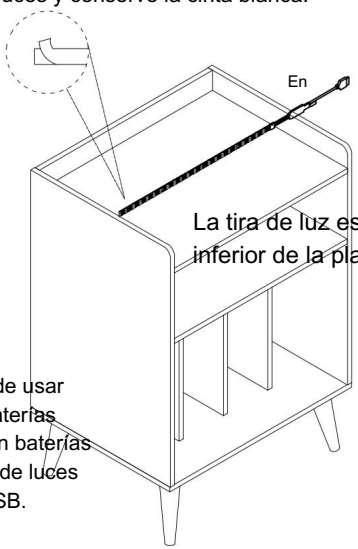

La tira de luz está instalada en la parte inferior de la placa.



Retire la pieza de plástico antes de usar el control remoto. Esta caja de baterías requiere que se compren e instalen baterías adicionales. Y se conecta a la tira de luces a través de la interfaz USB.

11

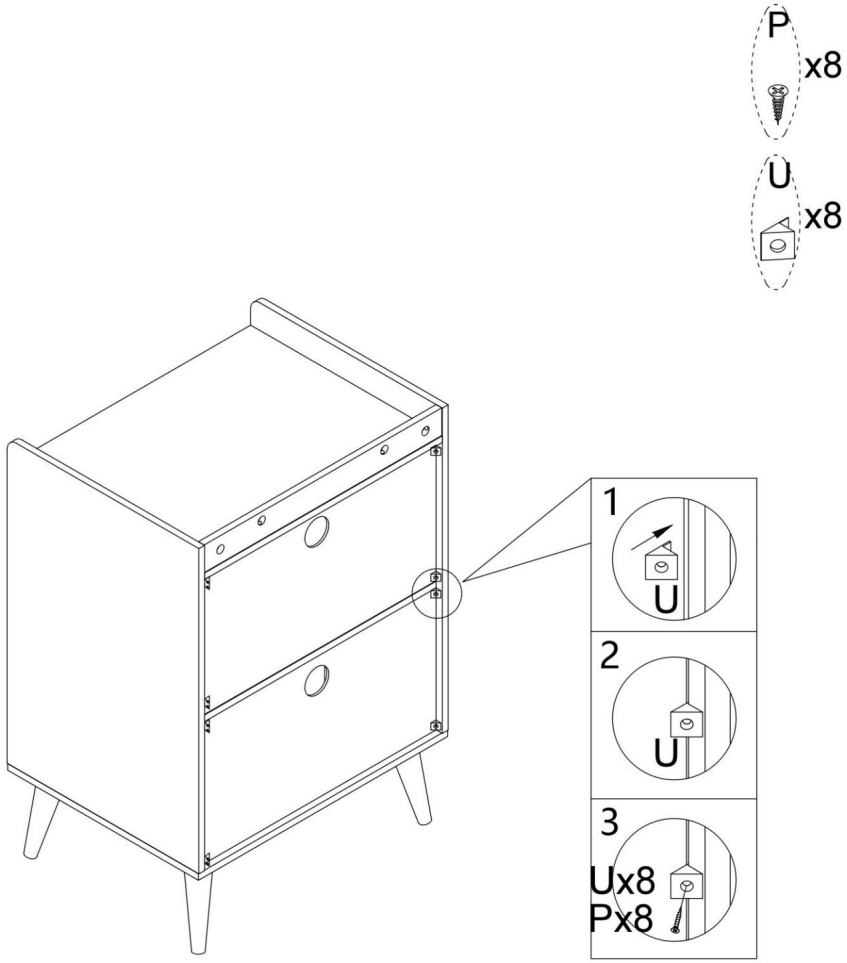

COMPLETION

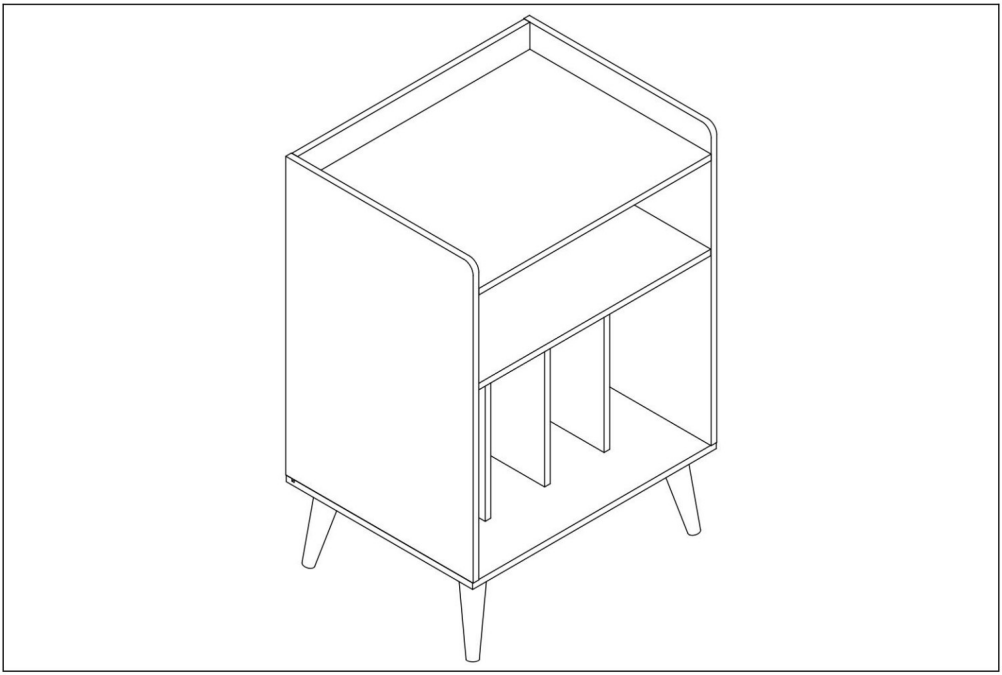



Eliminación
correcta. Este producto está sujeto a lo dispuesto en la Directiva europea 2012/19/UE. El símbolo de un contenedor de basura tachado indica que el producto requiere recogida selectiva en la Unión Europea. Esto se aplica al producto y a todos los accesorios marcados con este símbolo. Los productos marcados de esta manera no deben desecharse con la basura doméstica normal, sino que deben llevarse a un punto de recogida para el reciclaje de aparatos eléctricos y electrónicos.

Fabricante: Guangzhou Dingxin Office Furniture Co., LTD
Dirección: No. 1700, Renhe Road, Aotou Town, Distrito de Conghua, Guangzhou
Correo electrónico: support@vevor.com



VEVOR

Upgrade · The Home Creator Way

RECORD PLAYER STAND RACK

USER MANUAL

MODEL NO.: C240353G-02

VEVOR
Upgrade·The Home Creator Way

Record Player Stand Rack

MODEL NO.: C240353G-02

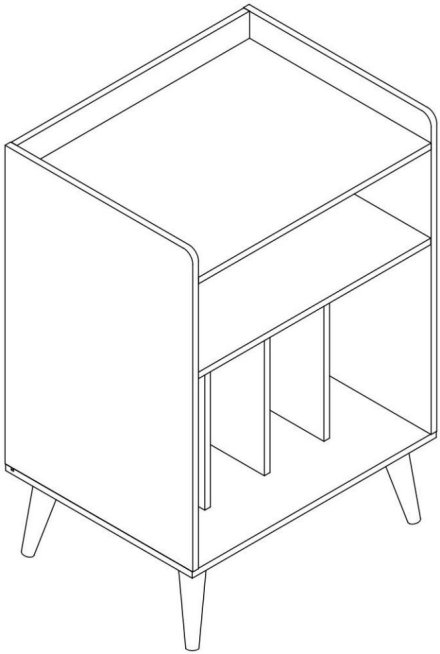

This is the original instruction, please read all manual instructions carefully before operating. VEVOR reserves a clear interpretation of our user manual. The appearance of the product shall be subject to the product you received. Please forgive us that we won't inform you again if there are any technology or software updates on our product.

⚠ WARNING:

Please read this manual carefully before using the product. Failure to do so may result in serious injury.

1. Produkt jest zgodny z odpowiednimi normami i przepisami.
Instalacja tego urządzenia musi być zgodna ze wszystkimi obowiązującymi przepisami i powinno być ono użytkowane wyłącznie w dobrze wentylowanych pomieszczeniach. Przed instalacją i użytkowaniem urządzenia należy zapoznać się z instrukcją obsługi.
2. Urządzenie to nie jest przeznaczone do użytku przez osoby (w tym dzieci) o ograniczonej sprawności fizycznej, sensorycznej lub umysłowej, a także osoby nieposiadające odpowiedniego doświadczenia lub wiedzy, chyba że znajdują się pod nadzorem osoby odpowiedzialnej za ich bezpieczeństwo lub otrzymały od niej instrukcje dotyczące korzystania z urządzenia.

3. Dzieci nie mogą bawić się produktami.
4. Produkt nie powinien być używany przez dzieci. Trzymaj urządzenie i jego przewód poza zasięgiem dzieci.
5. Urządzenie to przeznaczone jest do użytku domowego i podobnych zastosowań, takich jak:

- pomieszczenia kuchenne dla pracowników w sklepach, biurach i innych środowiskach pracy;
- domy gospodarcze;
- przez klientów w hotelach, motelach i innych obiektach o charakterze mieszkalnym;
- obiekty typu Bed and Breakfast.

6. Prosimy o prawidłowe przechowywanie produktu. Przed użyciem należy sprawdzić, czy produkt nie wykazuje nieprawidłowości. W przypadku nieprawidłowości należy zaprzestać jego użytkowania.
7. Produkt należy używać zgodnie z przeznaczeniem, ostrzegając przed potencjalnymi obrażeniami spowodowanymi niewłaściwym użyciem.
8. Jeśli przewód zasilający jest uszkodzony, należy go wymienić na specjalny przewód lub zespół dostępny u producenta lub jego przedstawiciela serwisowego.

ASSEMBLY PRECAUTIONS

1. Assemble only according to these instructions. Improper assembly can create hazards.

2. Wear ANSI-approved safety goggles and heavy-duty work gloves during assembly.

3. Keep the assembly area clean and well-lit.

4. Keep bystanders out of the area during assembly.

5. Do not assemble when tired or when under the influence of alcohol, drugs or medication.

6. The product capabilities apply to properly and completely assembled products only.

7. Assemble on a flat, level, hard and smooth surface capable of safely supporting the Record Player Stand Rack.

8. For additional information regarding the parts listed in the following pages, please refer to the Assembly Diagram of this manual. Unwrap and separate all parts in a clean work area.

SAVE THESE INSTRUCTIONS

USE PRECAUTIONS

TO PREVENT SERIOUS INJURY AND DEATH FROM TIPPING:

1. This product is not a toy. Do not allow children to play with or near this item.

2. Do not exceed weight capacities before moving.

3. Use only on a flat, hard and smooth surface capable of safely supporting a fully loaded Record Player Stand Rack.

4. Use as intended only.

5. Inspect before every use; do not use if parts are loose or damaged.

TECHNICAL SPECIFICATIONS

Model	C240353G-02
Rating(s)	220-240 V prądu przemiennego, 50/60 Hz, 10 A
Product Dimensions (LxWxH)(mm)	520*400*750
Net Weight(kg)	About 12.35

*Products such as specifications, appearance, and design are subject to modification without prior notice.

PARTS LIST

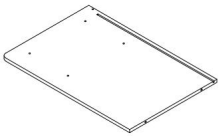

1 1 szt.

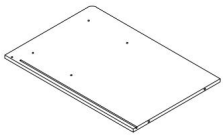

2 1 szt.

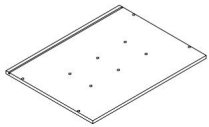

3 1 szt.

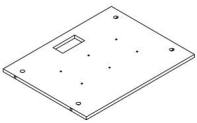

4 1 szt.



5 1 szt.

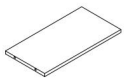

6 3 szt.

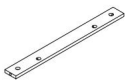

7 1 szt.

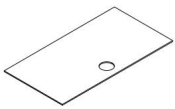

8 2 szt.



9 1 szt.

Lista części i sprzętu

 A 18 szt.	 B 10 szt.	 C 18 szt.	 P 30 szt.	 S 4 sztuki	 w 8 szt.	 w 1 szt.
 X 1 szt.	 I 4 sztuki	 z 4 sztuki				

ASSEMBLY STEPS

12

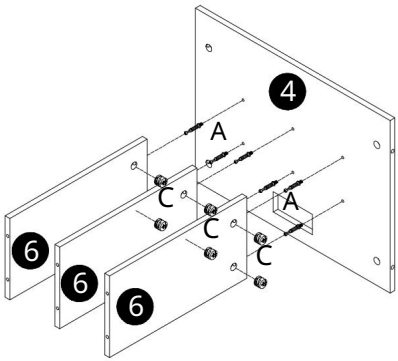

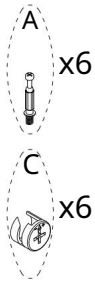

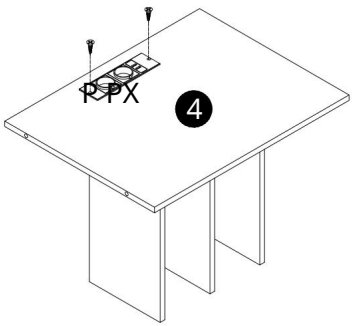

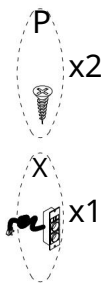

3

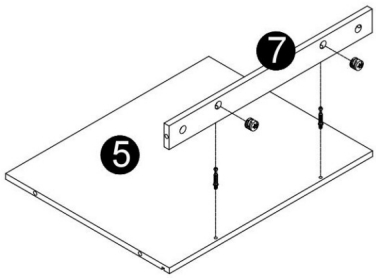

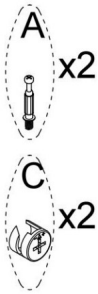

4

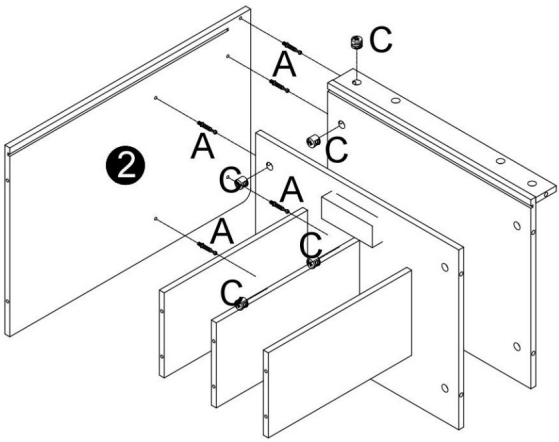

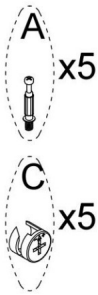

5

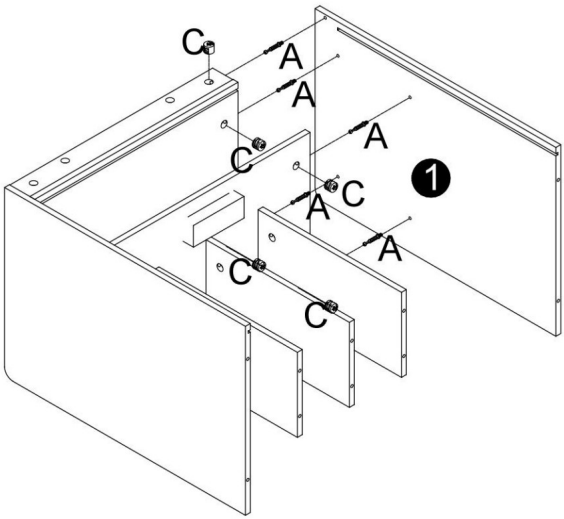

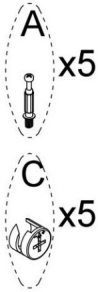

6

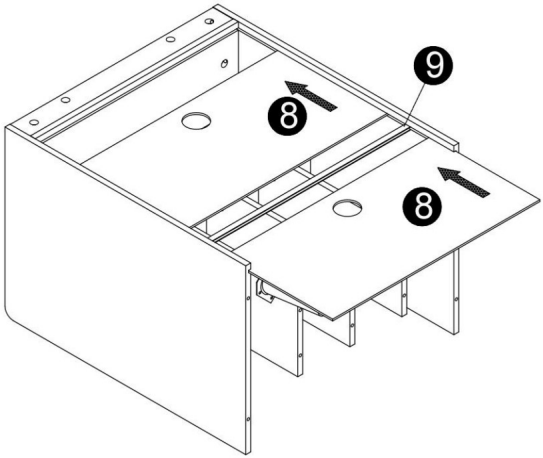

7

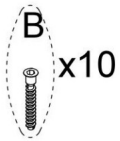

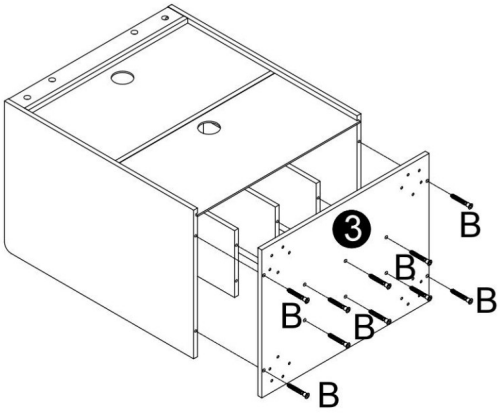

8

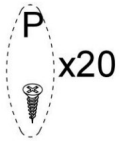

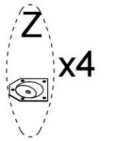

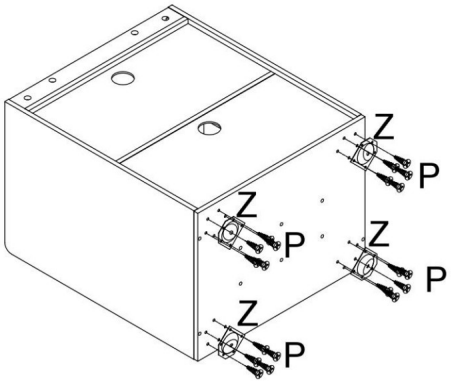

9

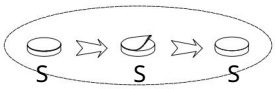

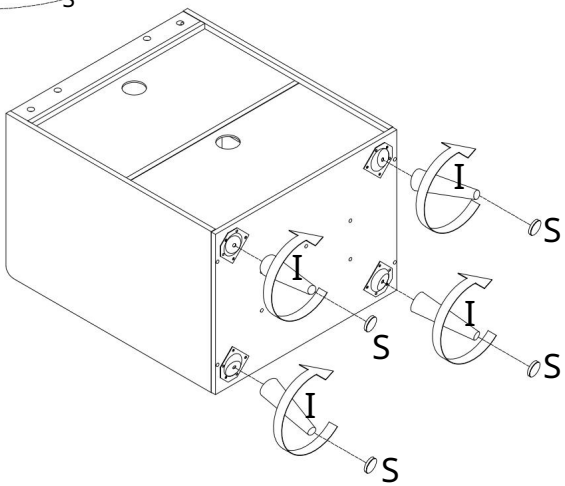



10

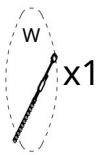

Proszę zdjąć niebieską folię ochronną z wyłącznika świateł i zachować białą taśmę.

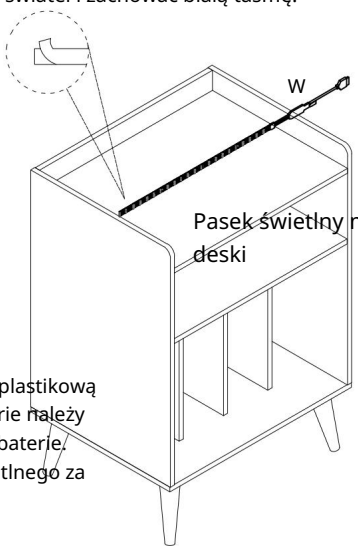

Pasek świetlny montowany jest na dole deski



Przed użyciem pilota należy zdjąć plastikową część. Do tego pojemnika na baterie należy dokupić i zainstalować dodatkowe baterie. Pilot jest podłączony do paska świetlnego za pomocą interfejsu USB.

11

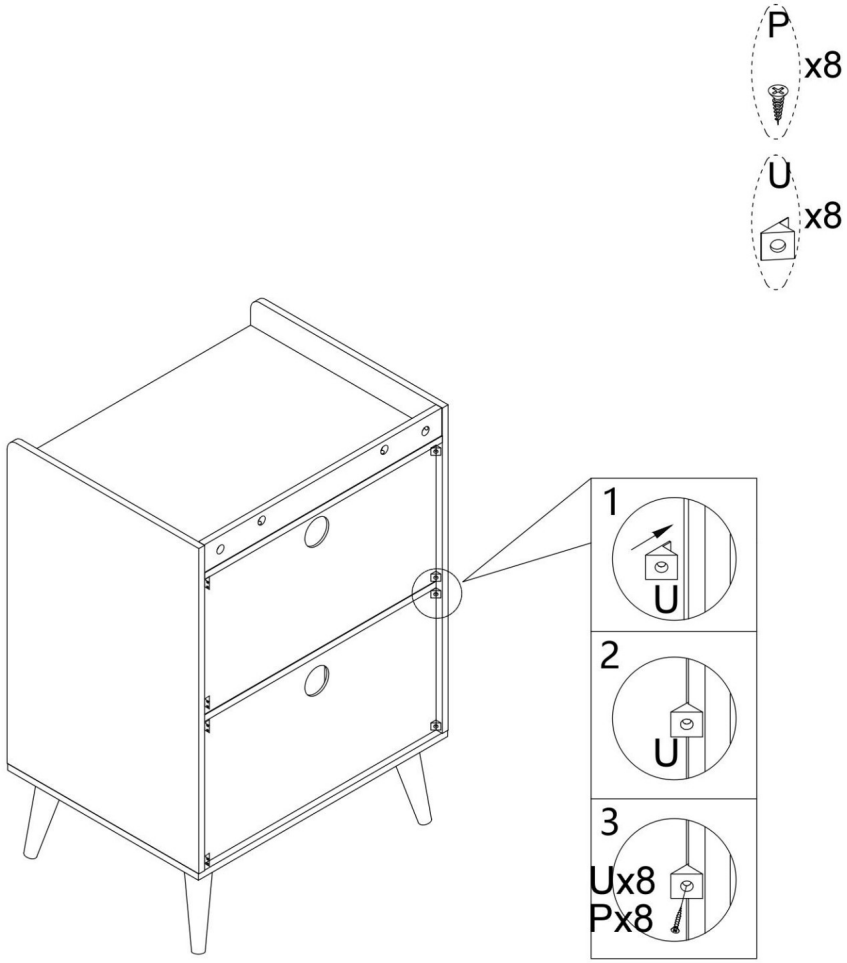

COMPLETION

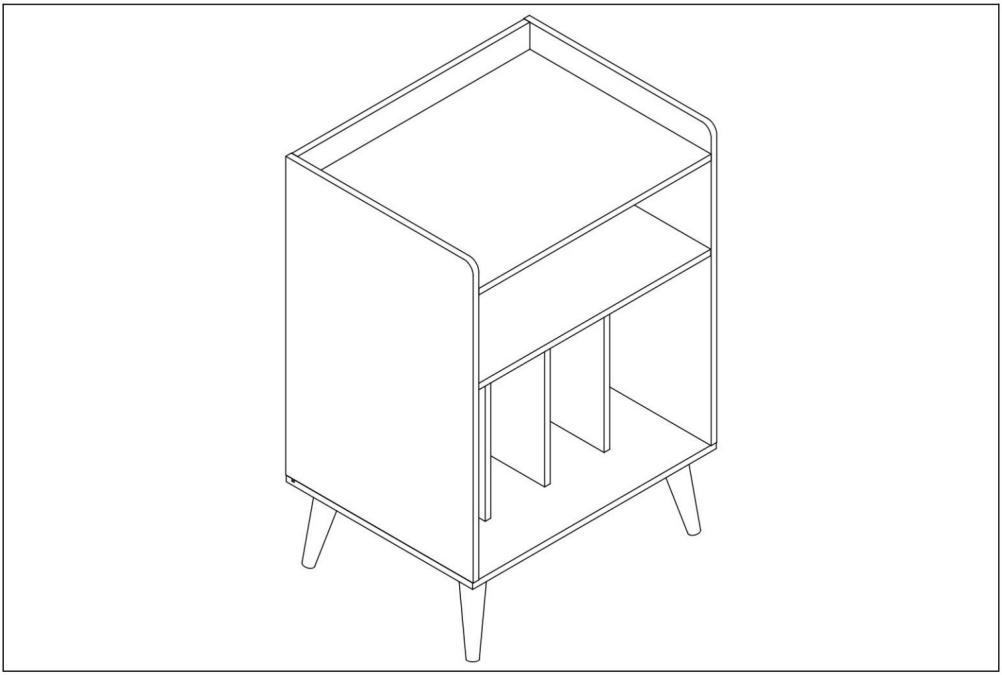



Prawidłowa
utylizacja Produkt ten podlega postanowieniom dyrektywy europejskiej 2012/19/UE. Symbol przekreślonego kosza na kółkach oznacza, że produkt wymaga selektywnej zbiórki odpadów w Unii Europejskiej. Dotyczy to produktu i wszystkich akcesoriów oznaczonych tym symbolem. Produktów oznaczonych tym symbolem nie wolno wyrzucać razem ze zwykłymi odpadami domowymi, lecz należy je oddać do punktu zbiórki urządzeń elektrycznych i elektronicznych przeznaczonych do recyklingu.

Producent: Guangzhou Dingxin Office Furniture Co., LTD
Adres: Nr 1700, Renhe Road, Aotou Town, dystrykt Conghua, Guangzhou
E-mail: support@vevor.com



VEVOR

Upgrade · The Home Creator Way

RECORD PLAYER STAND RACK

USER MANUAL

MODEL NO.: C240353G-02

VEVOR
Upgrade·The Home Creator Way

Record Player Stand Rack

MODEL NO.: C240353G-02

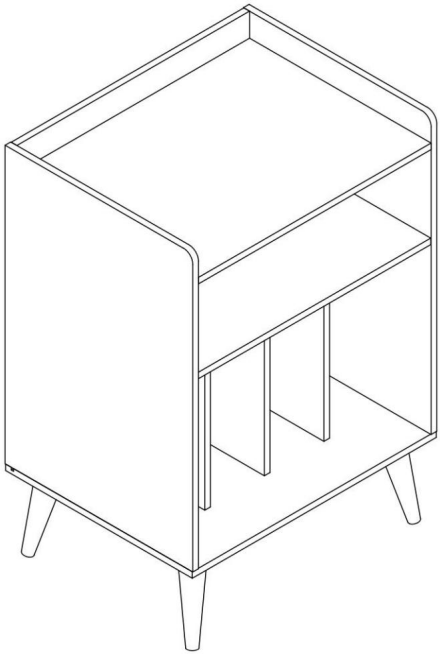

This is the original instruction, please read all manual instructions carefully before operating. VEVOR reserves a clear interpretation of our user manual. The appearance of the product shall be subject to the product you received. Please forgive us that we won't inform you again if there are any technology or software updates on our product.

⚠ WARNING:

Please read this manual carefully before using the product. Failure to do so may result in serious injury.

1. Het product voldoet aan de relevante normen en voorschriften.
De installatie van dit apparaat moet voldoen aan alle geldende voorschriften en het mag alleen worden gebruikt in goed geventileerde ruimtes. Lees de gebruikershandleiding voordat u dit apparaat installeert en gebruikt.
2. Dit apparaat is niet bedoeld voor gebruik door personen (inclusief kinderen) met beperkte fysieke, zintuiglijke of mentale vermogens, of gebrek aan ervaring en kennis, tenzij zij onder toezicht staan of instructies hebben gekregen over het gebruik van het apparaat van een persoon die verantwoordelijk is voor hun veiligheid.

3. Kinderen mogen niet met de producten spelen.
4. Dit product is niet geschikt voor gebruik door kinderen. Houd het apparaat en het snoer buiten het bereik van kinderen.
5. Dit apparaat is bedoeld voor gebruik in huishoudens en soortgelijke toepassingen, zoals:
- personeelskeukens in winkels, kantoren en andere werkomgevingen;

- boerderijen;
- door klanten in hotels, motels en andere woonomgevingen;
- bed & breakfast-achtige omgevingen.
6. Bewaar het product op de juiste manier. Controleer voor gebruik of het product niet afwijkend is. Stop het gebruik als er afwijkingen zijn.
7. Gebruik het product volgens het beoogde gebruik. Er bestaat een waarschuwing voor mogelijk letsel door verkeerd gebruik.
8. Indien het netsnoer beschadigd is, moet het worden vervangen door een speciaal snoer of een speciale adapter die verkrijgbaar is bij de fabrikant of diens servicevertegenwoordiger.

ASSEMBLY PRECAUTIONS

1. Assemble only according to these instructions. Improper assembly can create hazards.

2. Wear ANSI-approved safety goggles and heavy-duty work gloves during assembly.

3. Keep the assembly area clean and well-lit.

4. Keep bystanders out of the area during assembly.

5. Do not assemble when tired or when under the influence of alcohol, drugs or medication.

6. The product capabilities apply to properly and completely assembled products only.

7. Assemble on a flat, level, hard and smooth surface capable of safely supporting the Record Player Stand Rack.

8. For additional information regarding the parts listed in the following pages, please refer to the Assembly Diagram of this manual. Unwrap and separate all parts in a clean work area.

SAVE THESE INSTRUCTIONS

USE PRECAUTIONS

TO PREVENT SERIOUS INJURY AND DEATH FROM TIPPING:

1. This product is not a toy. Do not allow children to play with or near this item.

2. Do not exceed weight capacities before moving.

3. Use only on a flat, hard and smooth surface capable of safely supporting a fully loaded Record Player Stand Rack.

4. Use as intended only.

5. Inspect before every use; do not use if parts are loose or damaged.

TECHNICAL SPECIFICATIONS

Model	C240353G-02
Rating(s)	220-240 Vac, 50/60 Hz, 10 A
Product Dimensions (LxWxH)(mm)	520*400*750
Net Weight(kg)	About 12.35

*Products such as specifications, appearance, and design are subject to modification without prior notice.

PARTS LIST

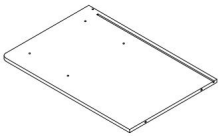

1 stuk

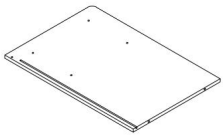

2 stuks

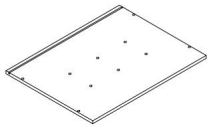

3 stuks

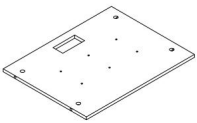

4 stuks



5 stuks

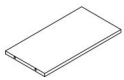

6 8 stuks

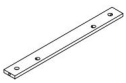

7 1 stuk

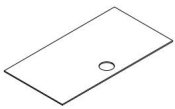

8 2 stuks



9 1 stuk

Onderdelen- en hardwarelijst

A 18 stuks	 B 10 stuks	 C 18 stuks	 P 30 stuks	 S 4 stuks	 IN 8 stuks	 In 1 stuk
 X 1 stuk	 EN 4 stuks	 MET 4 stuks				

ASSEMBLY STEPS

12

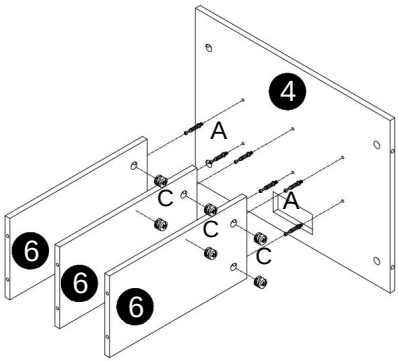

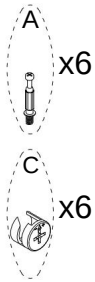

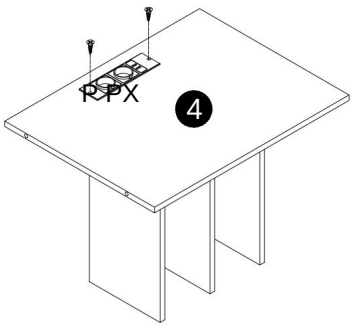

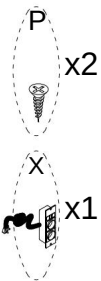

3

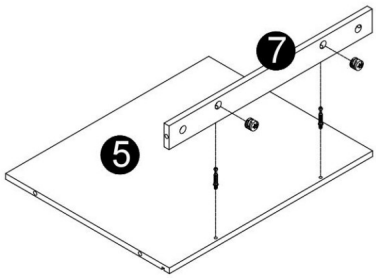

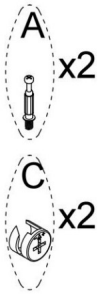

4

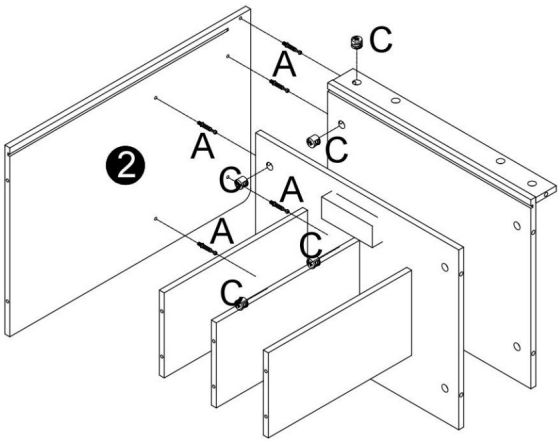

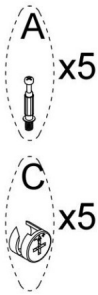

5

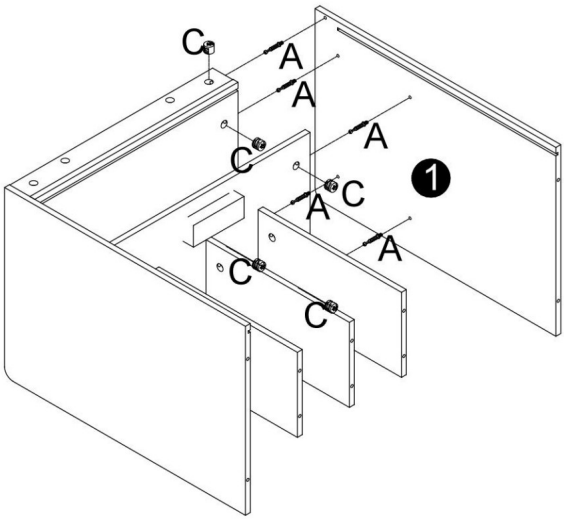

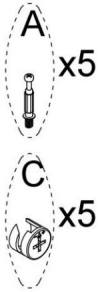

6

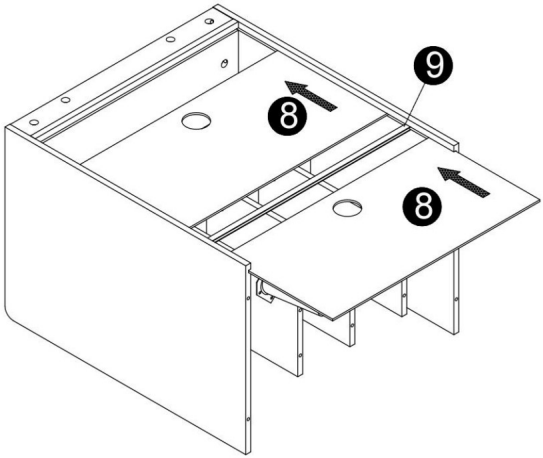

7

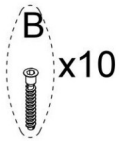

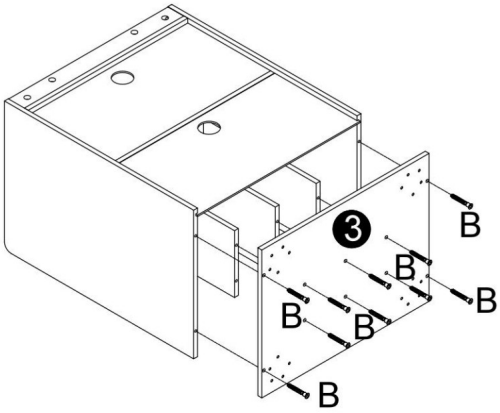

8

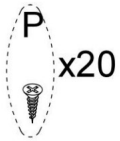

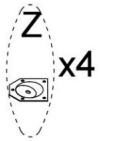

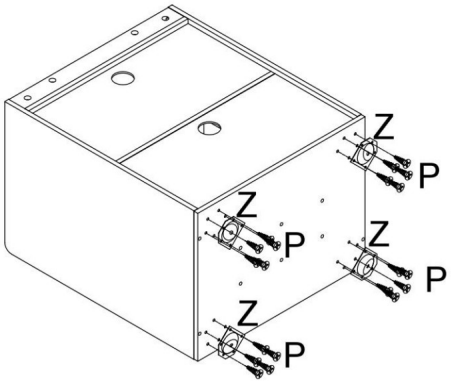

9

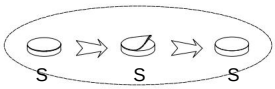

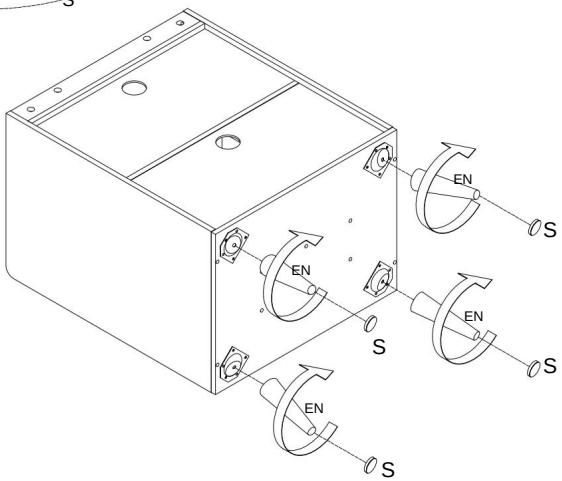

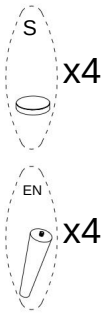

10

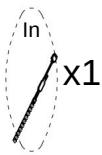

Verwijder de blauwe beschermfolie van de lichtstrip en laat de witte tape zitten.

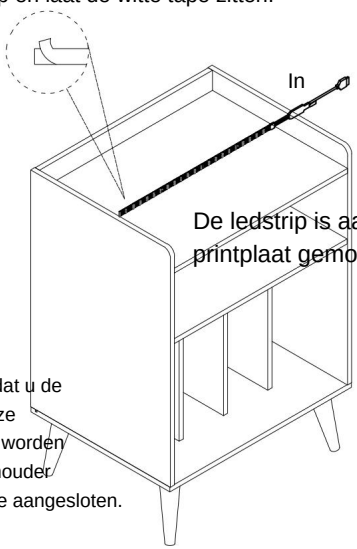

De ledstrip is aan de onderkant van de printplaat gemonteerd.



Verwijder het plastic onderdeel voordat u de afstandsbediening gebruikt. Voor deze batterijhouder moeten extra batterijen worden aangeschaft en geplaatst. De batterijhouder wordt via een USB-interface aangesloten.

11

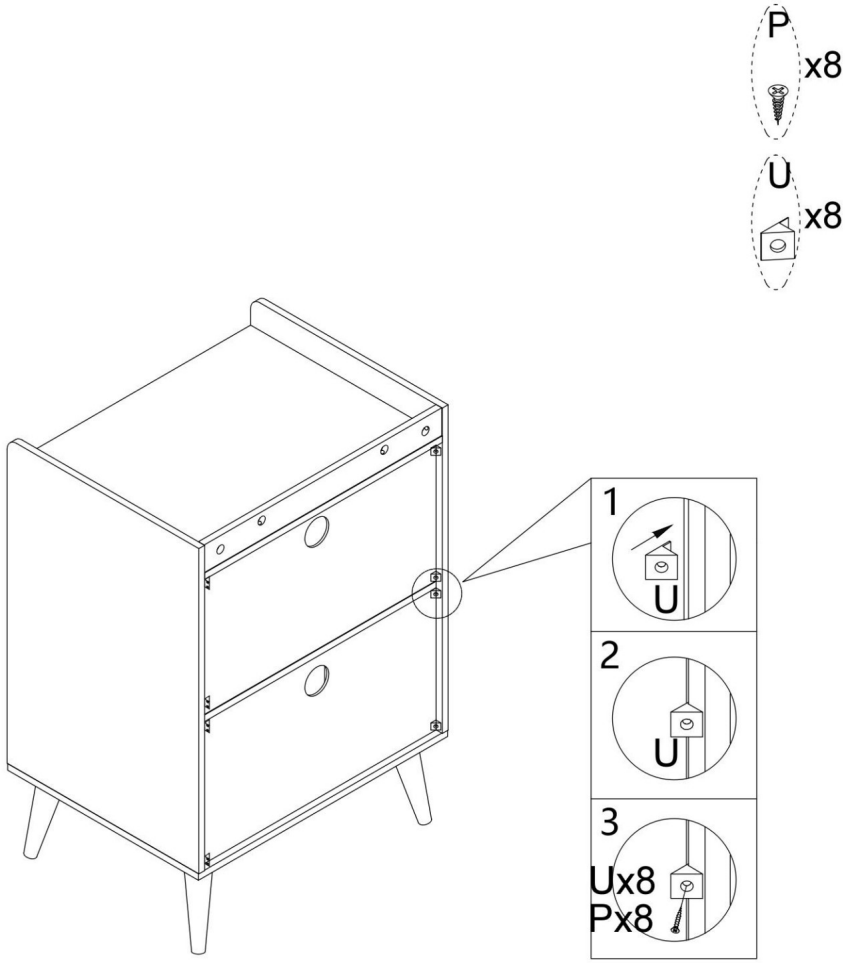

COMPLETION

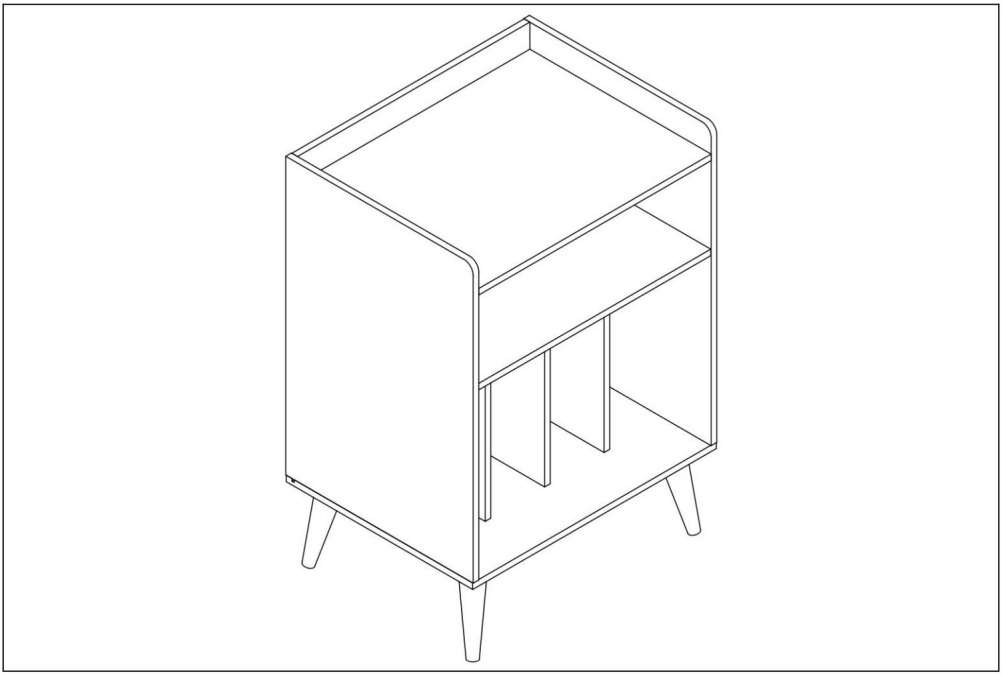



Correcte verwijdering

Dit product valt onder de bepalingen van de Europese Richtlijn 2012/19/EU. Het symbool met een doorgestreepte afvalcontainer geeft aan dat het product in de Europese Unie apart moet worden ingezameld. Dit geldt voor het product en alle accessoires die met dit symbool zijn gemarkeerd. Producten die zo zijn gemarkeerd, mogen niet bij het normale huisvuil worden weggegooid, maar moeten worden ingeleverd bij een inzamelpunt voor de recycling van elektrische en elektronische apparaten.

Fabrikant: Guangzhou Dingxin Office Furniture Co., LTD
Adres: Renheweg nr. 1700, Aotou, Conghua District.
Guangzhou
E-mail: support@vevor.com



VEVOR

Upgrade · The Home Creator Way

RECORD PLAYER STAND RACK

USER MANUAL

MODEL NO.: C240353G-02

VEVOR
Upgrade·The Home Creator Way

Record Player Stand Rack

MODEL NO.: C240353G-02

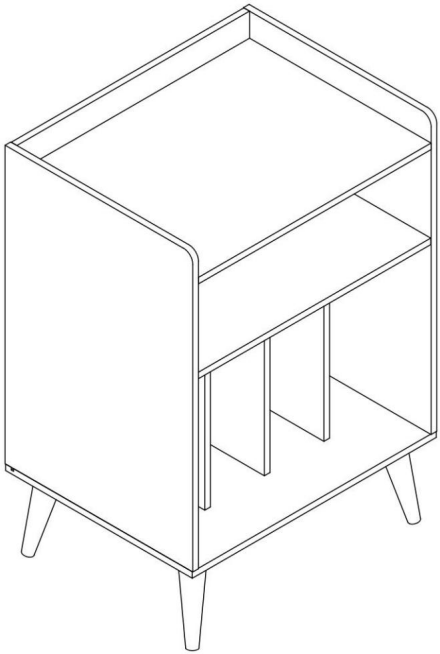

This is the original instruction, please read all manual instructions carefully before operating. VEVOR reserves a clear interpretation of our user manual. The appearance of the product shall be subject to the product you received. Please forgive us that we won't inform you again if there are any technology or software updates on our product.

⚠ WARNING:

Please read this manual carefully before using the product. Failure to do so may result in serious injury.

1. Produkten uppfyller relevanta standarder och föreskrifter.
Installationen av denna enhet måste uppfylla alla tillämpliga föreskrifter och den bör endast användas i välventilerade utrymmen. Läs användarmanualen innan du installerar och använder denna utrustning.
2. Denna apparat är inte avsedd att användas av personer (inklusive barn) med nedsatt fysisk, sensorisk eller mental förmåga, eller bristande erfarenhet och kunskap, såvida de inte har övervakats eller fått instruktioner om användningen av apparaten av en person som ansvarar för deras säkerhet.

3. Barn får inte leka med produkterna.
4. Denna produkt får inte användas av barn. Förvara apparaten och dess sladd utom räckhåll för barn.
5. Denna apparat är avsedd att användas i hushållet och liknande tillämpningar såsom:
- personalkök i butiker, kontor och andra arbetsmiljöer;

- bondgårdar;
- av kunder på hotell, motell och andra bostadsmiljöer;
- miljöer med bed and breakfast-liknande egenskaper.
6. Förvara produkten ordentligt. Kontrollera om produkten är avvikande före användning. Om den är avvikande, sluta använda den.
7. Använd produkten enligt avsedd användning. Varna för potentiella skador vid felaktig användning.
8. Om nätsladden är skadad måste den bytas ut mot en specialsladd eller ett specialaggregat som finns tillgängligt från tillverkaren eller dess servicerepresentant.

ASSEMBLY PRECAUTIONS

1. Assemble only according to these instructions. Improper assembly can create hazards.

2. Wear ANSI-approved safety goggles and heavy-duty work gloves during assembly.

3. Keep the assembly area clean and well-lit.

4. Keep bystanders out of the area during assembly.

5. Do not assemble when tired or when under the influence of alcohol, drugs or medication.

6. The product capabilities apply to properly and completely assembled products only.

7. Assemble on a flat, level, hard and smooth surface capable of safely supporting the Record Player Stand Rack.

8. For additional information regarding the parts listed in the following pages, please refer to the Assembly Diagram of this manual. Unwrap and separate all parts in a clean work area.

SAVE THESE INSTRUCTIONS

USE PRECAUTIONS

TO PREVENT SERIOUS INJURY AND DEATH FROM TIPPING:

1. This product is not a toy. Do not allow children to play with or near this item.

2. Do not exceed weight capacities before moving.

3. Use only on a flat, hard and smooth surface capable of safely supporting a fully loaded Record Player Stand Rack.

4. Use as intended only.

5. Inspect before every use; do not use if parts are loose or damaged.

TECHNICAL SPECIFICATIONS

Model	C240353G-02
Rating(s)	220–240 V AC, 50/60 Hz, 10 A
Product Dimensions (LxWxH)(mm)	520*400*750
Net Weight(kg)	About 12.35

*Products such as specifications, appearance, and design are subject to modification without prior notice.

PARTS LIST

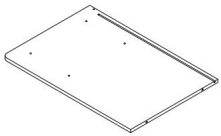

❶1 st

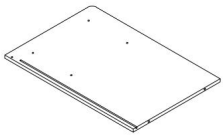

❷1 st

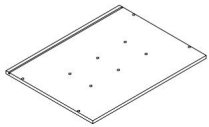

❸1 st

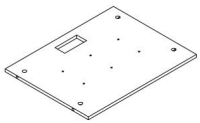

❹1 st



❺1 st

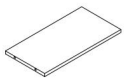

❻3 st

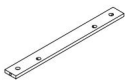

❼1 st

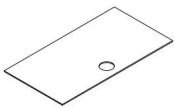

❽2 st



❾1 st

Delar och hårdvara lista

En 18 st	 B 10 st	 C 18 st	 P 30 st	S 4 st	 I 8 st	 I 1 st
 X 1 st	 4 st	 4 st				

ASSEMBLY STEPS

12

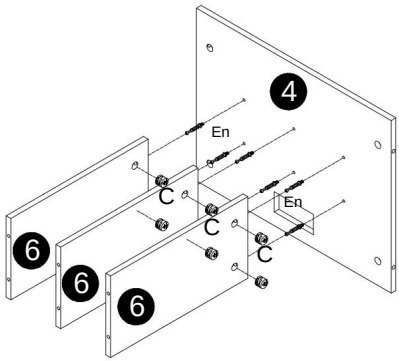

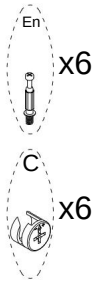

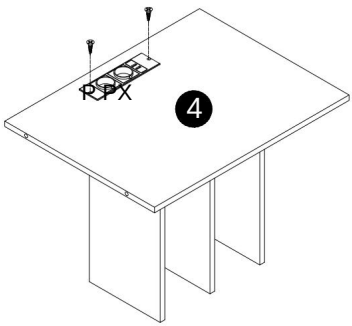



3

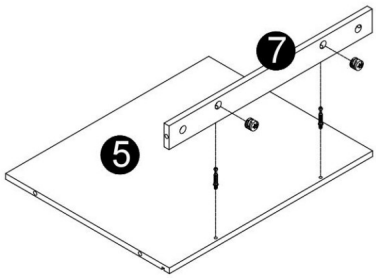

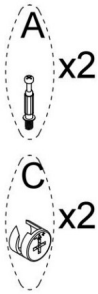

4

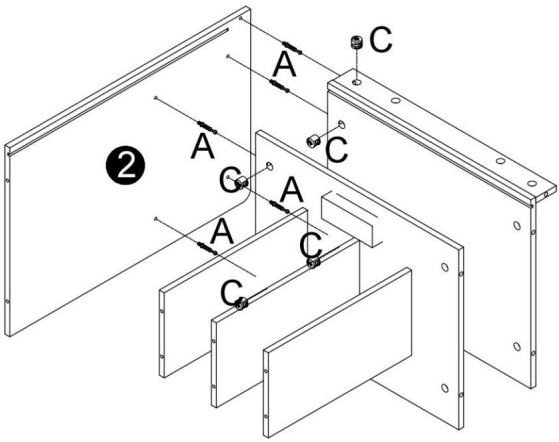

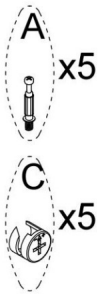

5

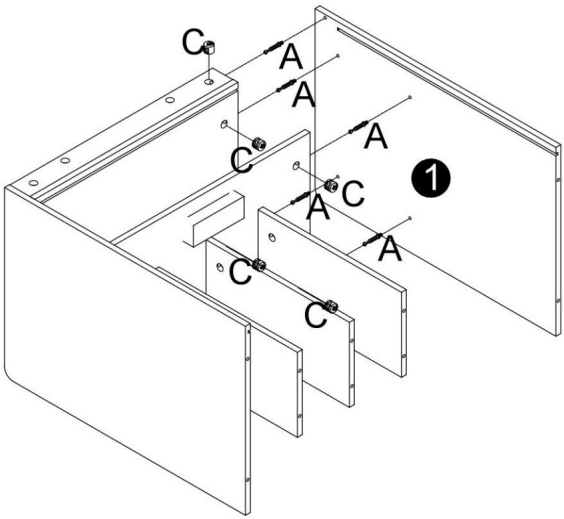

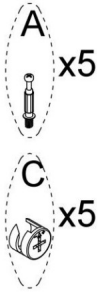

6

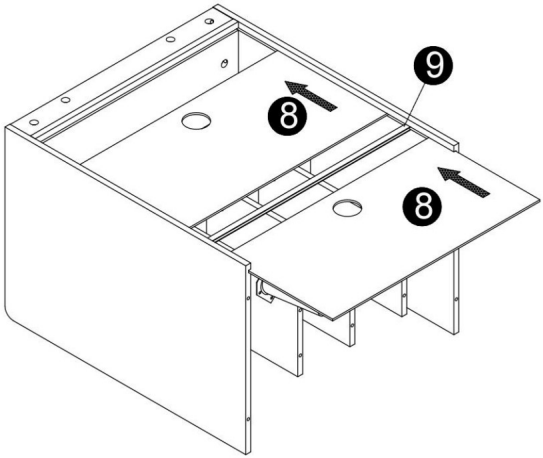

7

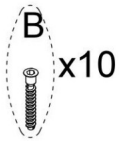

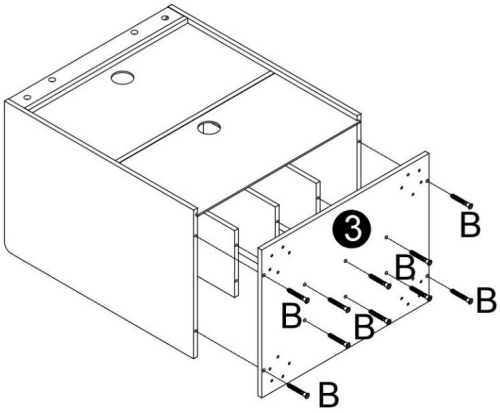

8

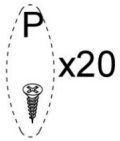

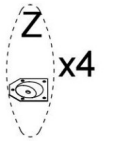

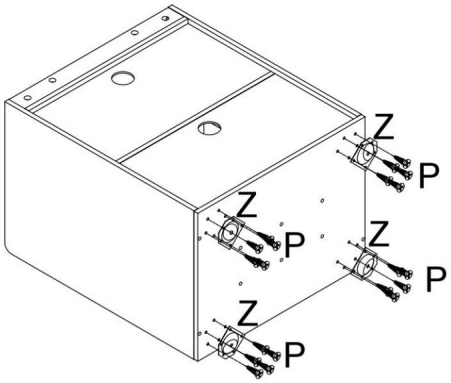

9

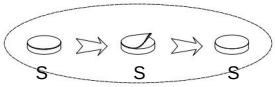

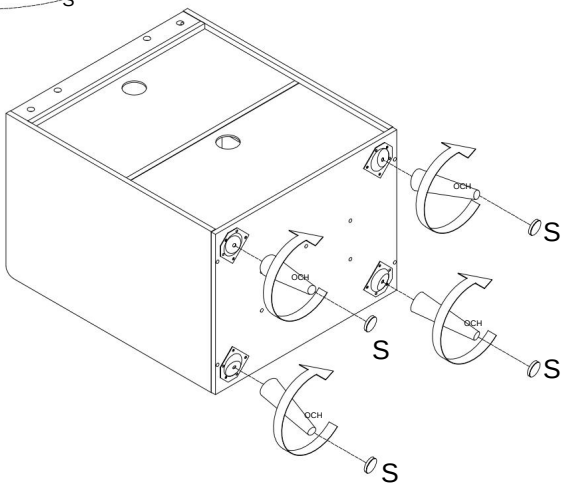

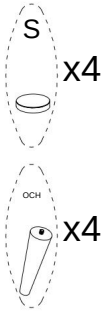

10

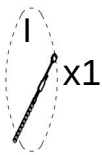

Ta bort den blå skyddsfilmen på ljusutlösningen och behåll den vita tejpen.

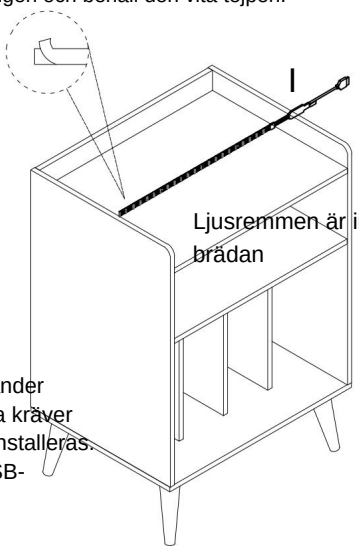

Ljusremmen är installerad längst ner på brädan



Ta bort plastbiten innan du använder fjärrkontrollen. Denna batterilåda kräver att ytterligare batterier köps och installeras. Den ansluts till ljusremsan via USB-gränssnittet.

11

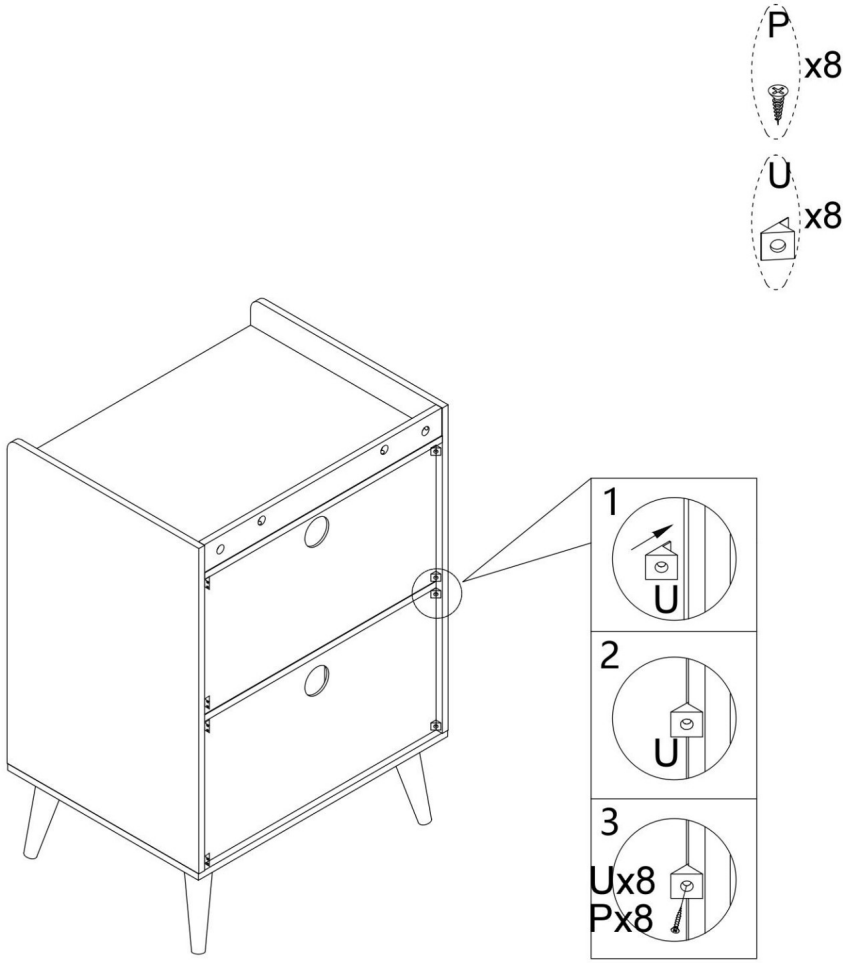

COMPLETION

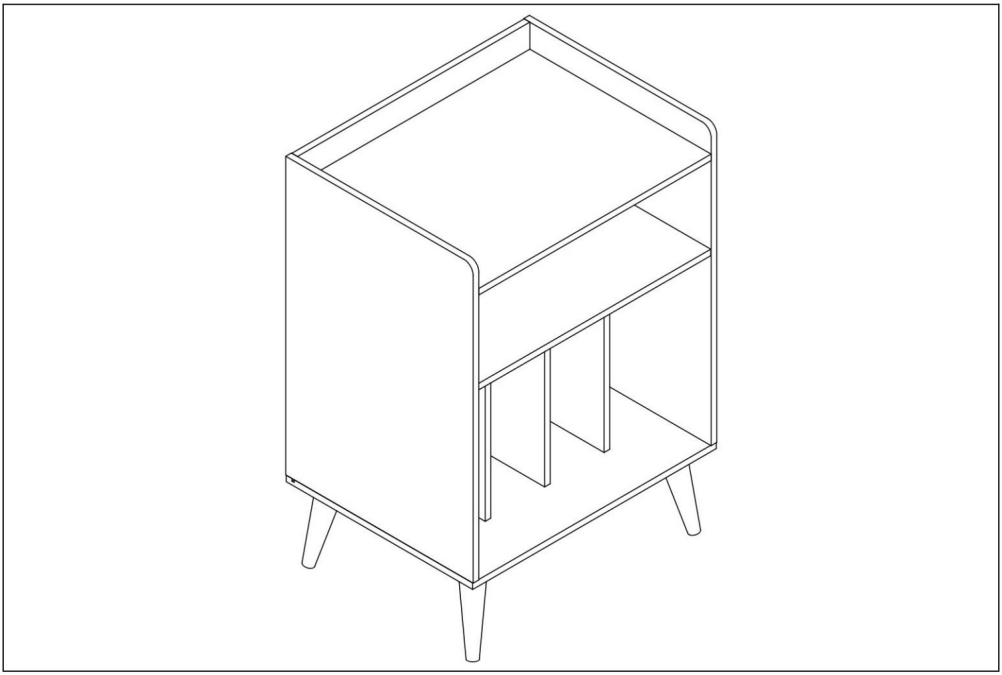



Korrekt
avfallshantering Denna produkt omfattas av bestämmelserna i det europeiska direktivet 2012/19/EU
Symbolen som visar en överstruken soptunna indikerar att produkten kräver
separat sophämtning inom Europeiska unionen. Detta gäller produkten och alla
tillbehör som är märkta med denna symbol. Produkter som är märkta som sådana får
inte kasseras med vanligt hushållsavfall, utan måste lämnas till en insamlingsplats för
återvinning av elektriska och elektroniska apparater.

Tillverkare: Guangzhou Dingxin Office Furniture Co., LTD
Adress: Renhe Road 1700, Aotou Town, Conghua-distriktet, Guangzhou
E-post: support@vevor.com

