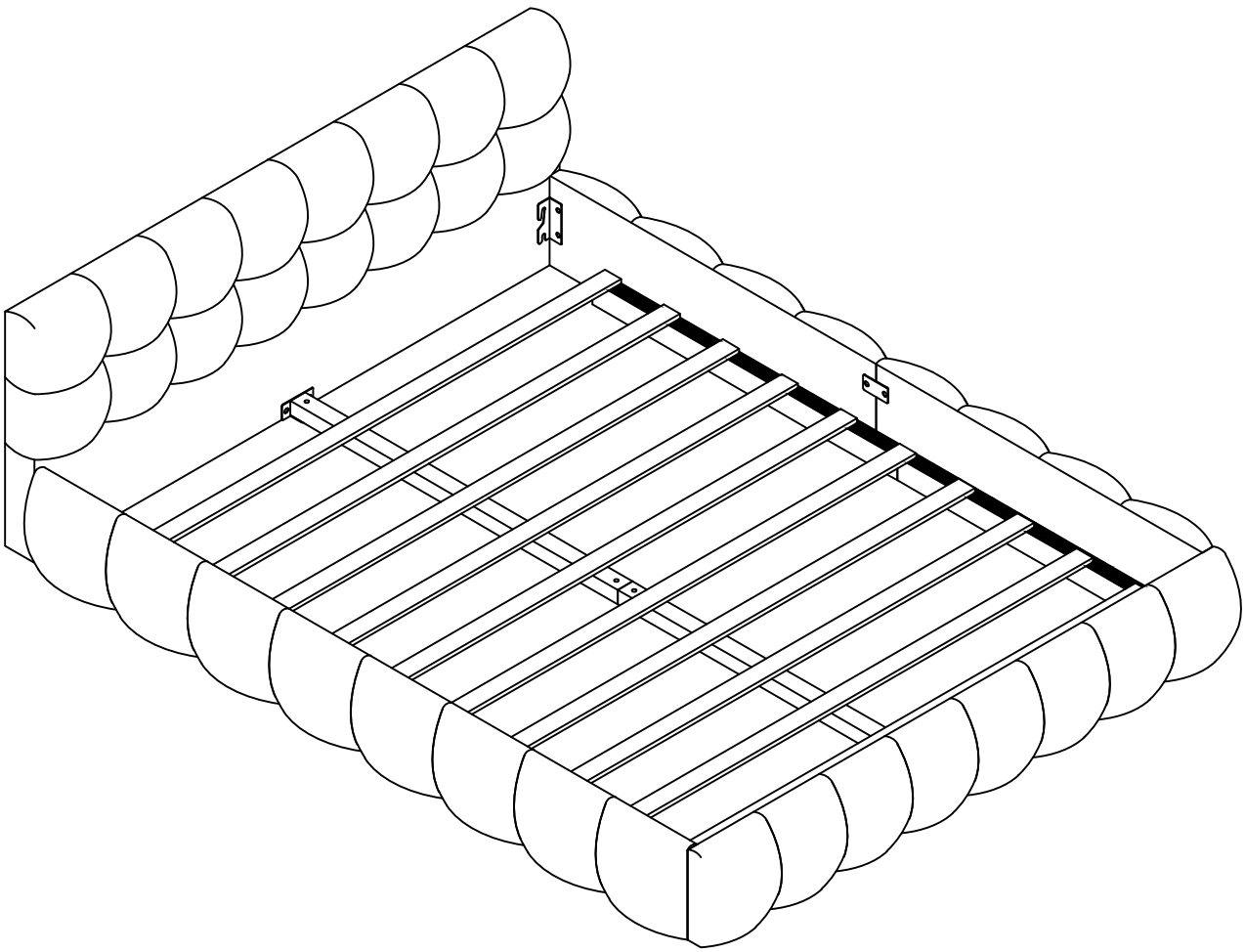

Explosion diagram

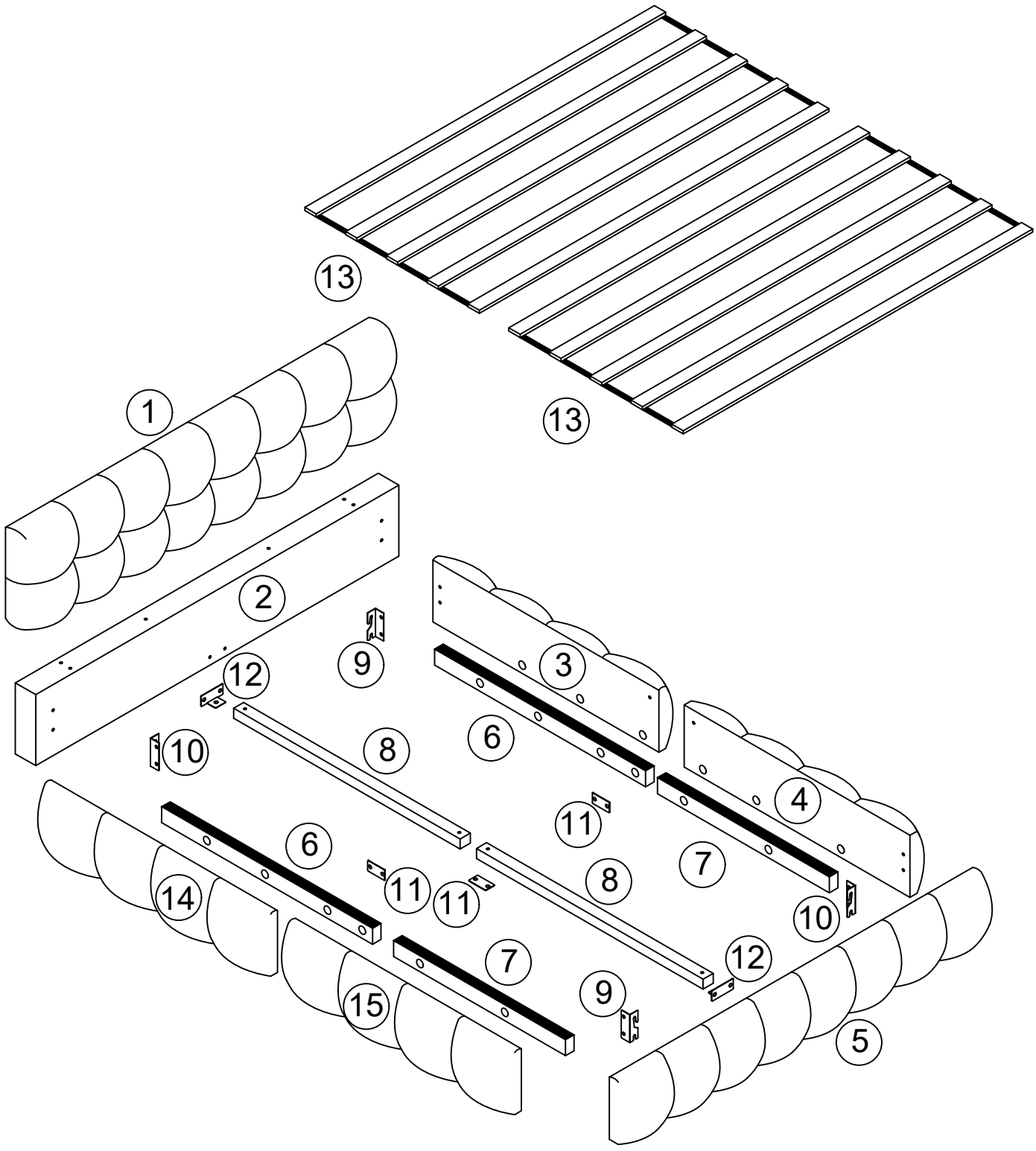

Parts list

1 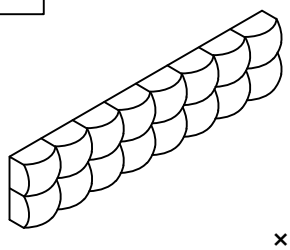 ×1	2 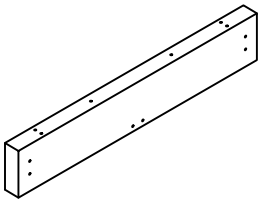 ×1	3 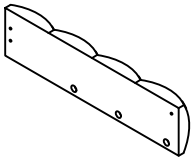 ×1	4 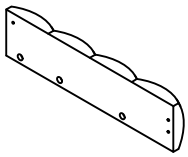 ×1
5 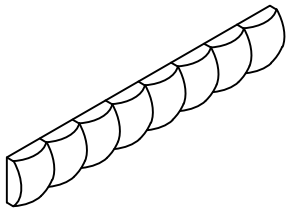 ×1	6 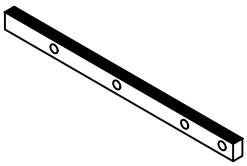 ×2	7 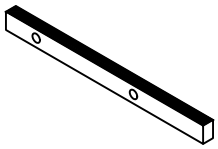 ×2	8 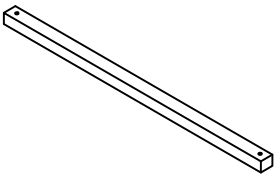 ×2
9  ×2	10  ×2	11 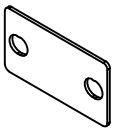 ×3	12 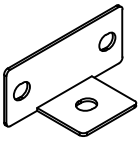 ×2
13 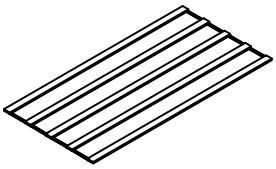 ×2	14 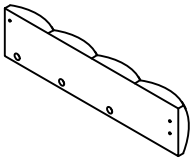 ×1	15 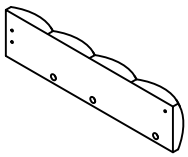 ×1	

Parts list

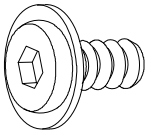			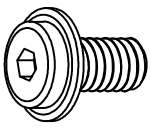			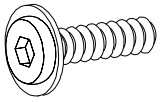			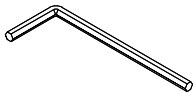		
A	M8×18mm	×20	B	M8×30mm	×14	C	M8×40mm	×12	D	M5	×1

step 1

B

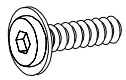

M8×30mm

×6

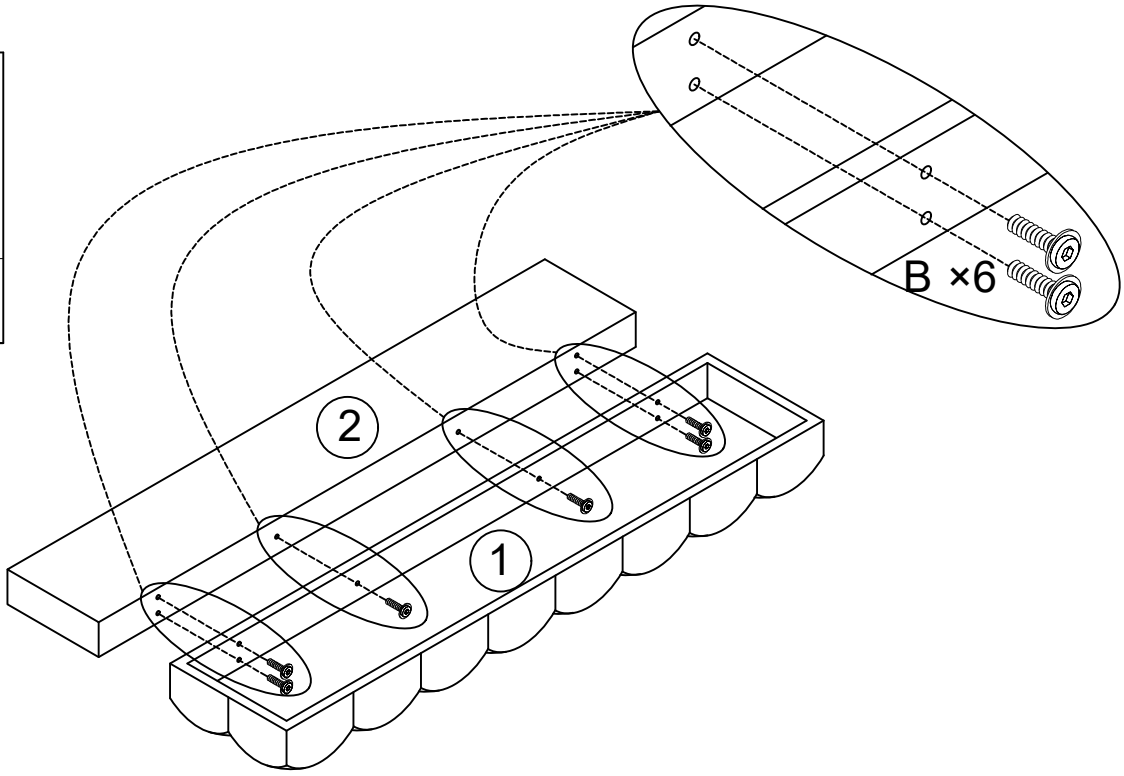

step 2

C

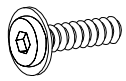

M8×40mm

×6

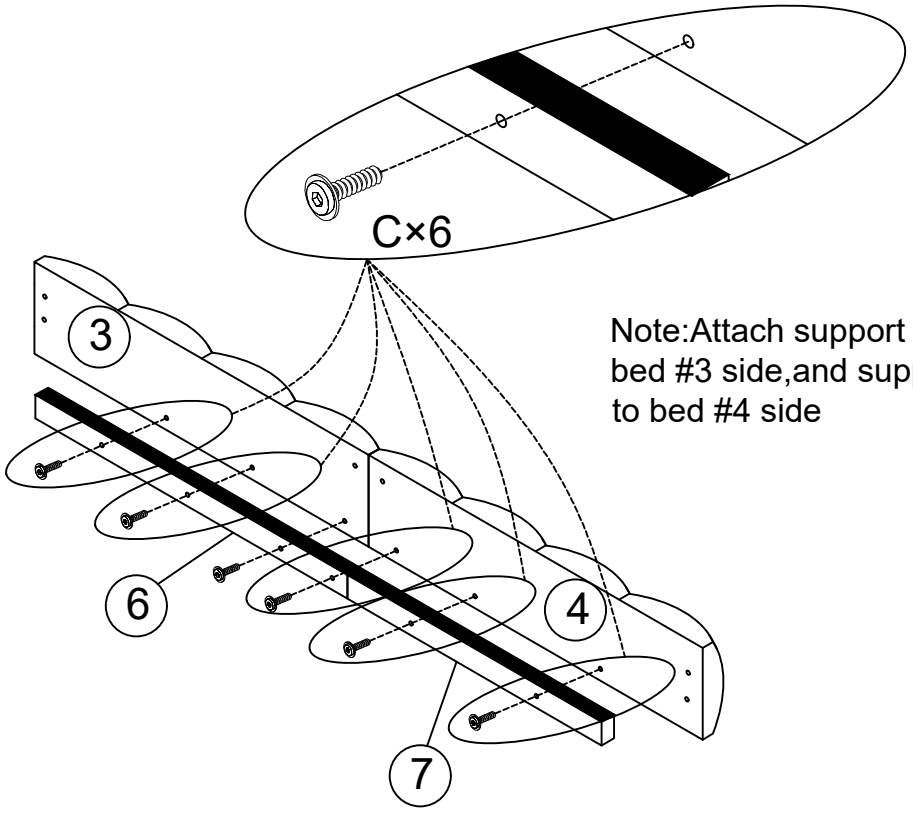

Note:Attach support wood #6 to bed #3 side,and support wood #7 to bed #4 side

step 3

C

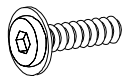

M8×40mm

×6

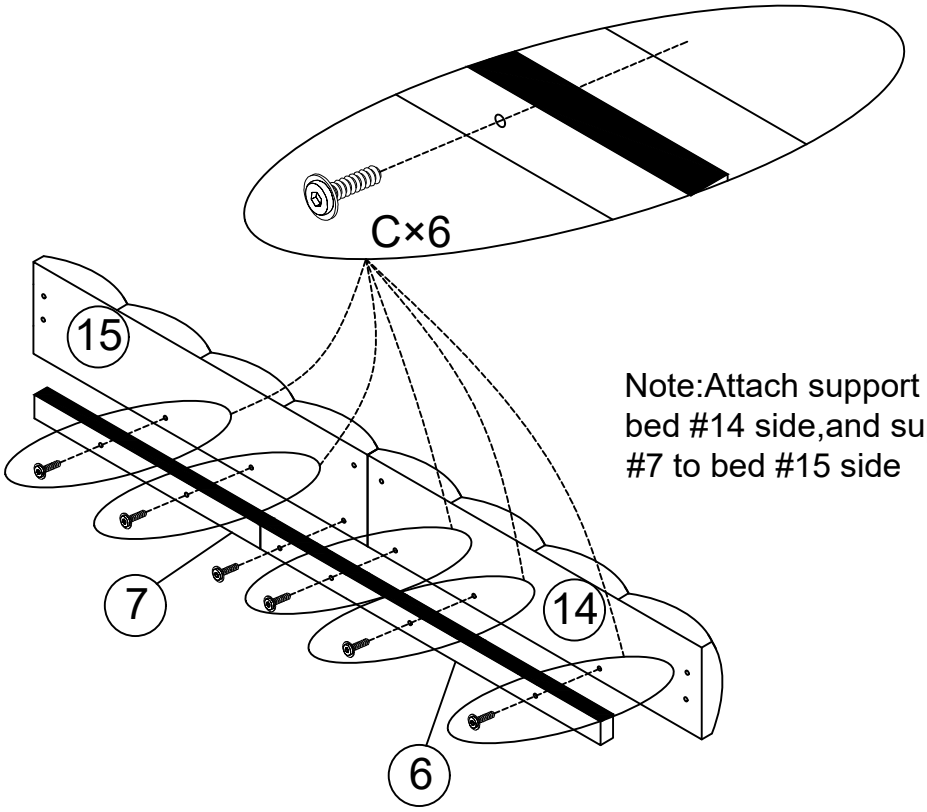

Note:Attach support wood #6 to bed #14 side,and support wood #7 to bed #15 side

step 4

A

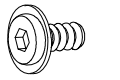

M8×18mm

×6

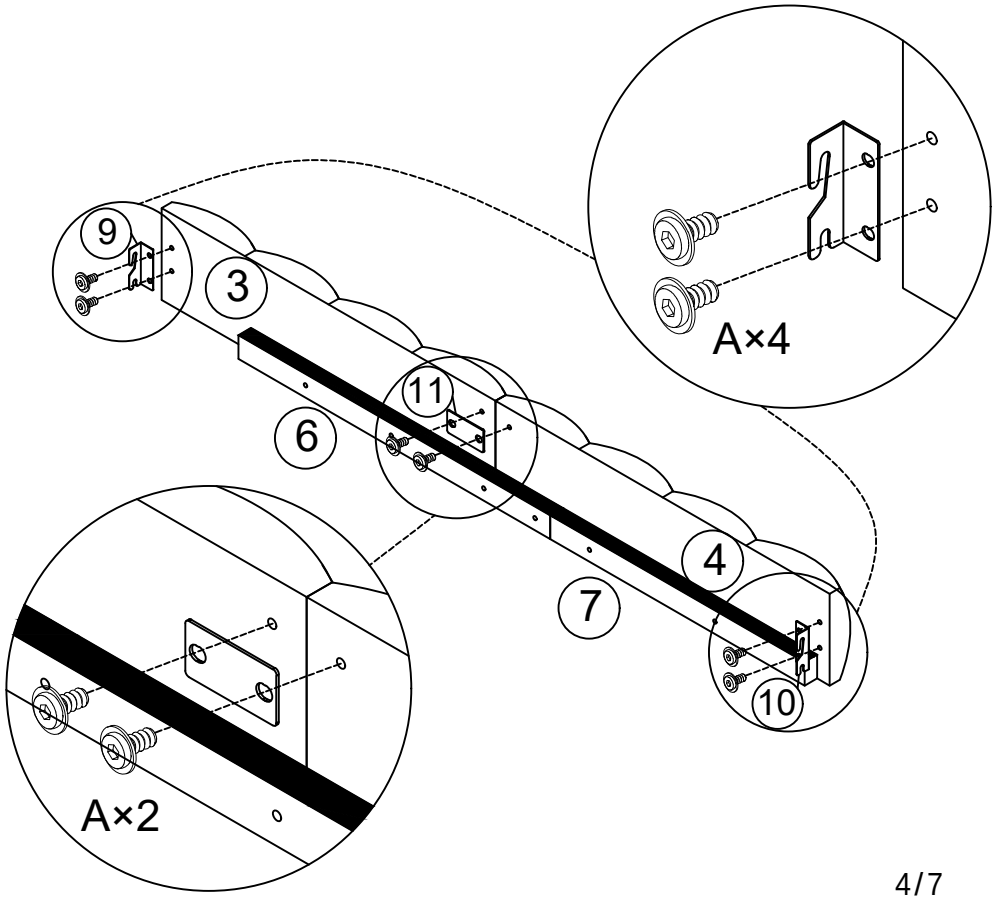

step 5

A

M8×18mm
×6

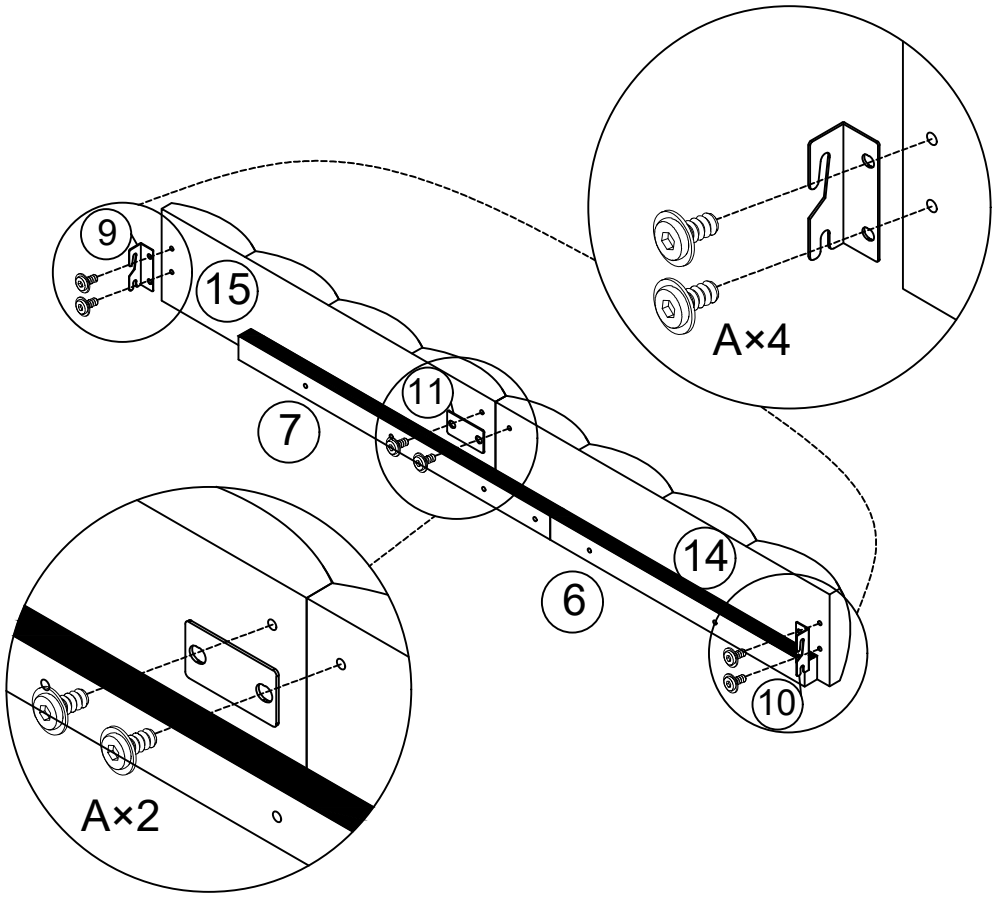

step 6

A

M8×18mm
×4

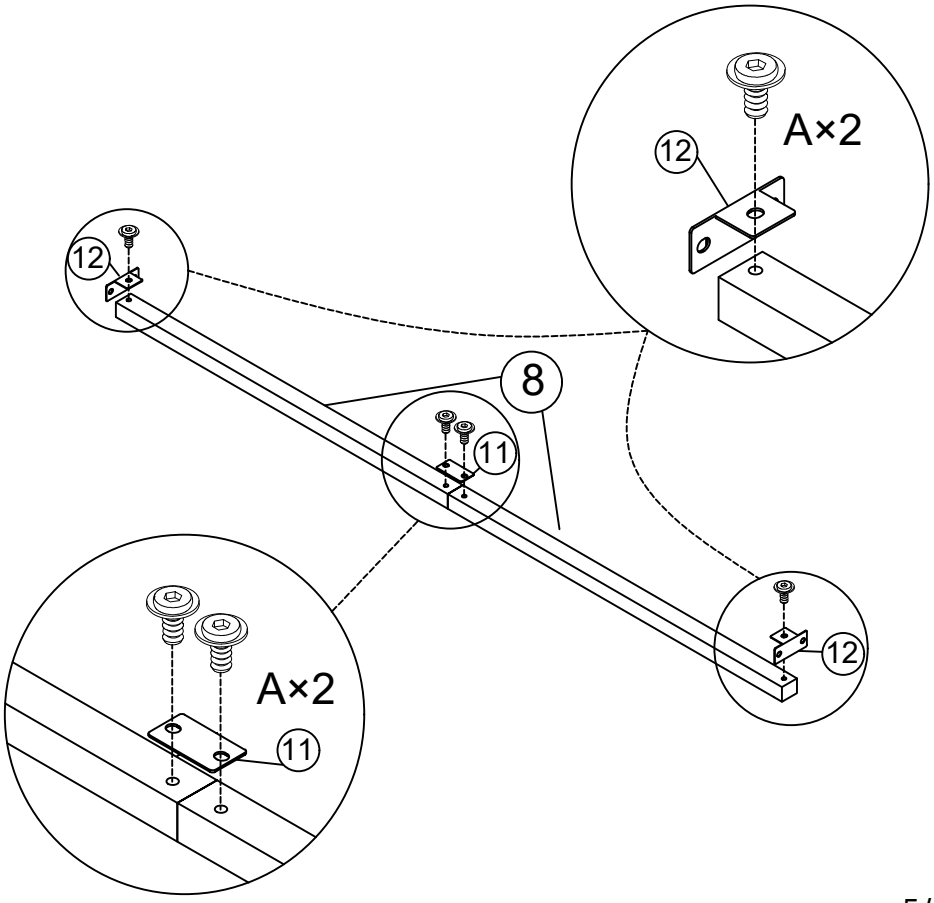

step 7

A  M8×18mm	×2
B  M8×30mm	×4

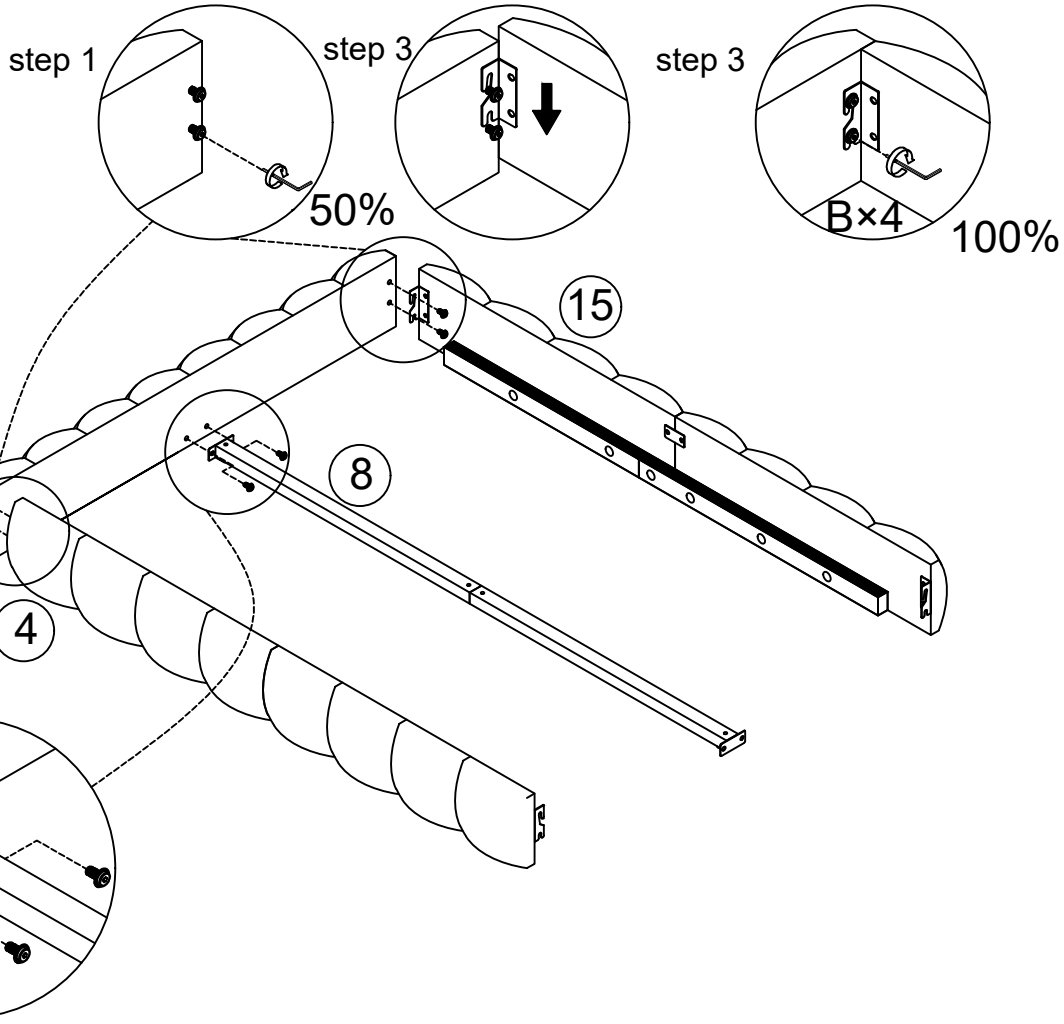

step 8

A  M8×18mm	×2
B  M8×30mm	×4

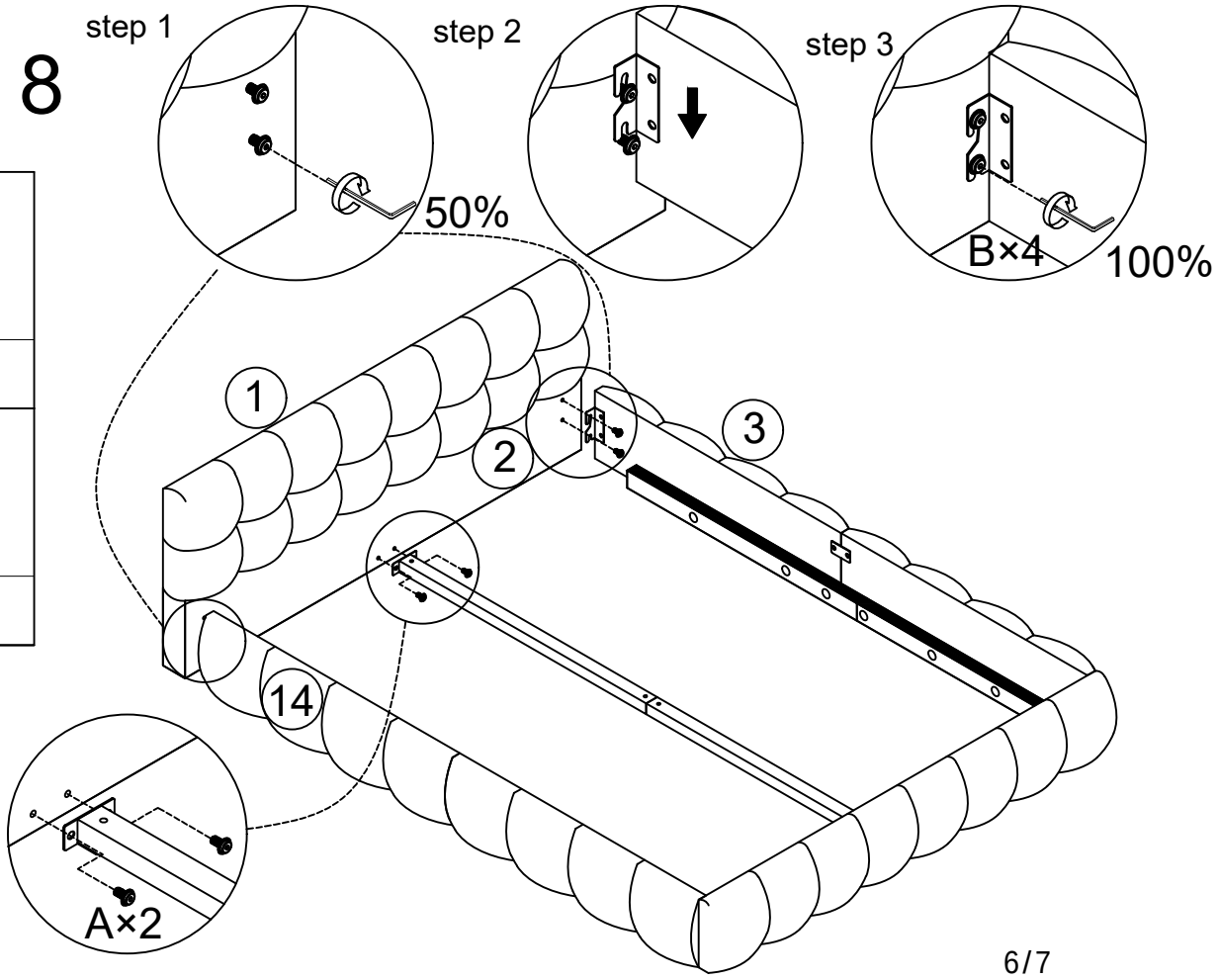

step 9

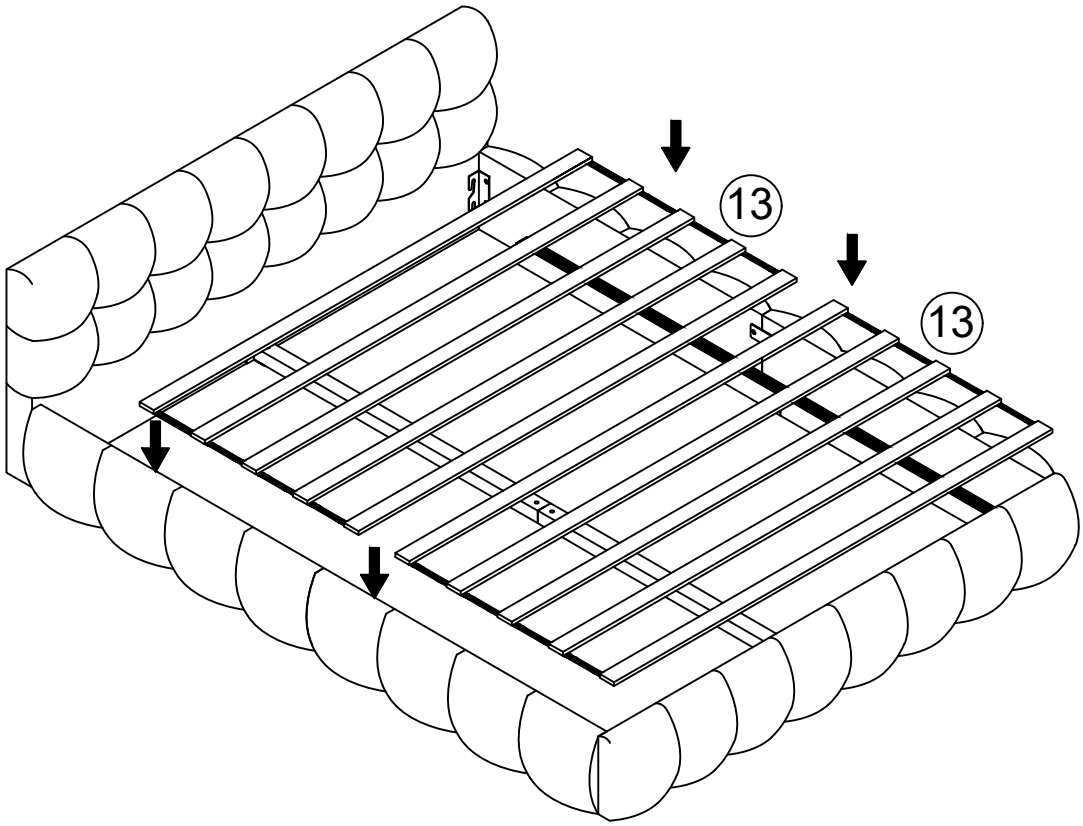

step 10

