LEYA

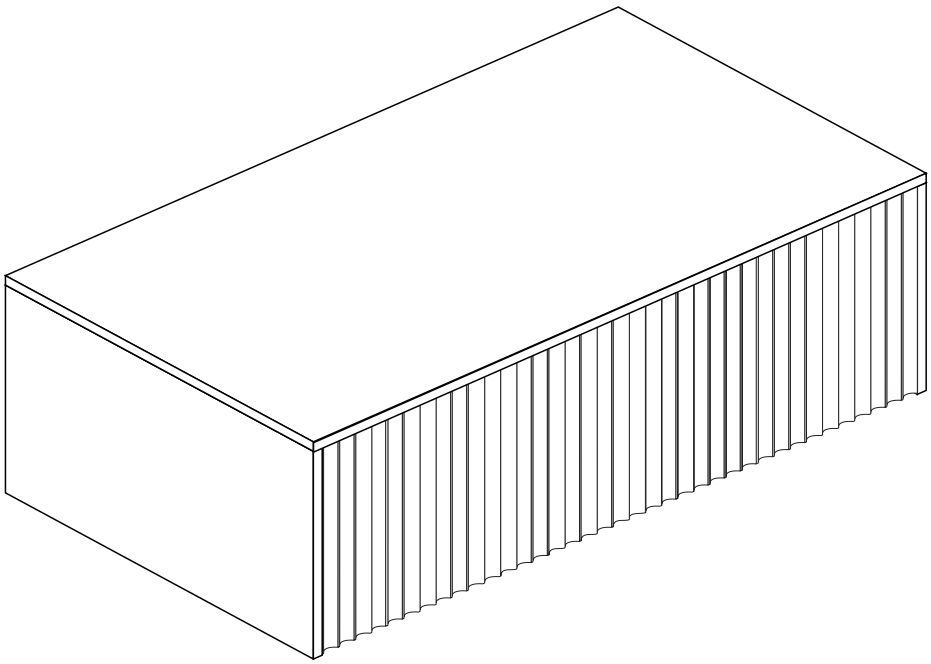

30MIN x2

05/2026 STI-000638

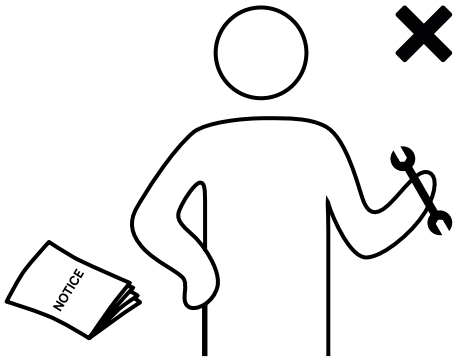
NOTICE

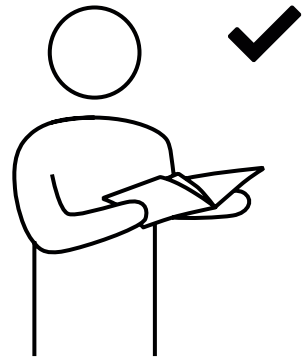

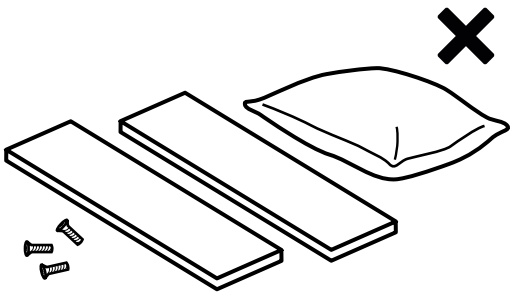

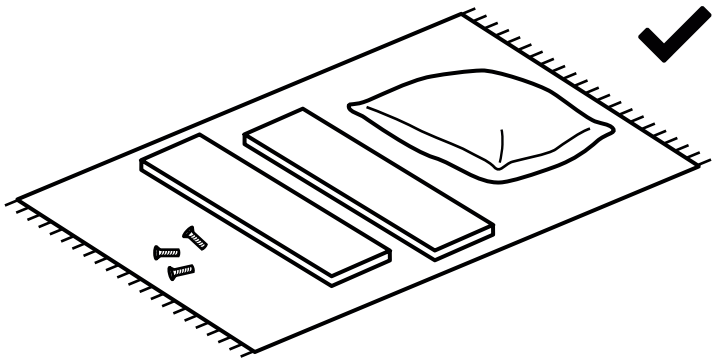

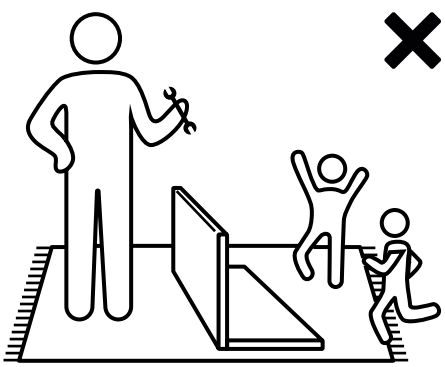

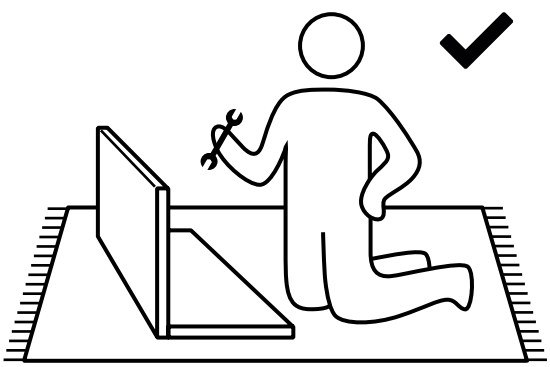

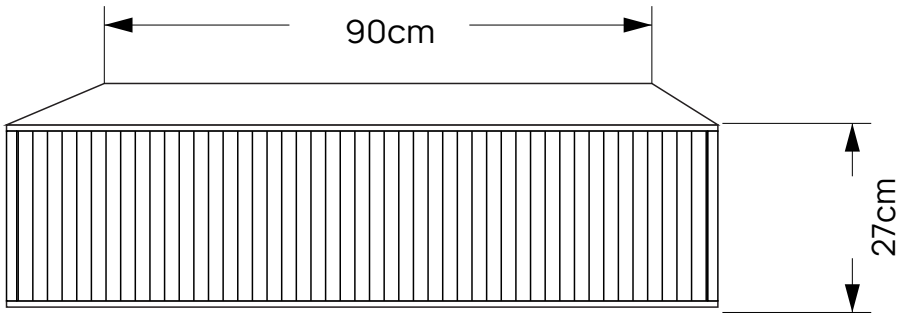
90cm
27cm

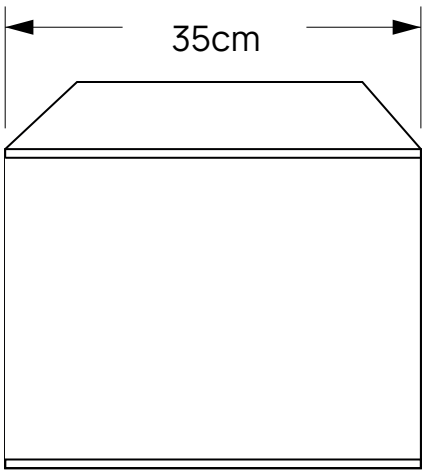
35cm

	REF	PCS	QTY	DIM
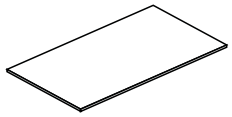	1	PCS-006033	x 1	90x33,4x1,5cm
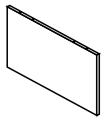	2	PCS-006038	x 1	33,3x25,5x1,5cm
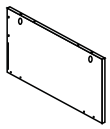	3	PCS-006039	x 1	33,3x25,5x1,5cm
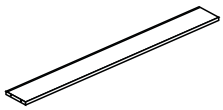	4	PCS-006040	x 1	86,8x8x1,5cm
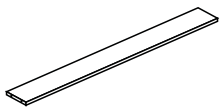	5	PCS-006041	x 1	86,8x8x1,5cm
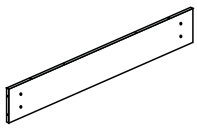	6	PCS-006042	x 1	86,8x12x1,5cm
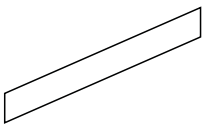	7	PCS-006043	x 1	87,7x12,4x0,3cm
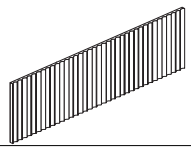	8	PCS-006044	x 1	89,7x27x1,5cm
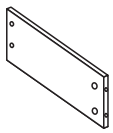	9	PCS-006045	x 1	30x14x1,2cm
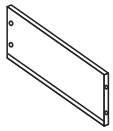	10	PCS-006034	x1	30x14x1,2cm
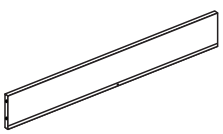	11	PCS-006035	x1	81,9x1,4x1,2cm

	REF	PCS	QTY	DIM
	12	PCS-006036	x1	82,8x29,7x0,3cm
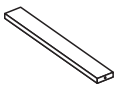	13	PCS-006037	x1	28.8x4x1,2cm
	A	PCS-005213	x 19	M6x35mm
	B	PCS-005214	x 19	M 15x10mm
	C	PCS-005215	x 10	M 6x30mm
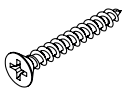	D	PCS-005216	x 5	M 4x40mm
	E	PCS-006057	x10	M 3,5x12mm
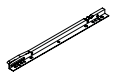	DL	PCS-005205	x 1	300mm
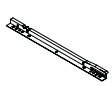	DR	PCS-005206	x 1	300mm
	CL	PCS-005203	x 1	300mm
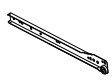	CR	PCS-005204	x 1	300mm

	REF	PCS	QTY	DIM
	F	PCS-005200	x8	ϕ20mm
	G	PCS-006078	x4	M 4x40mm
	H	PCS-006075	x4	ϕ35x15T
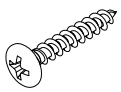	I	PCS-006076	x4	M 4x20mm
	J	PCS-008162	x19	ϕ21mm

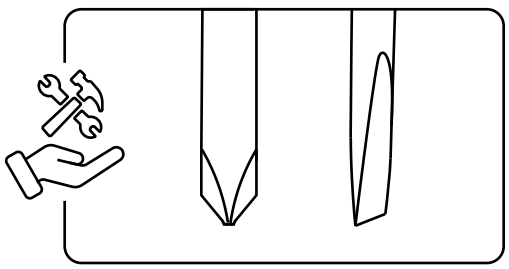

1.

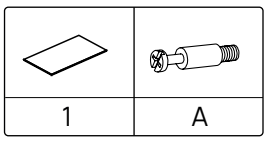

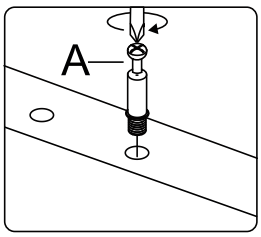

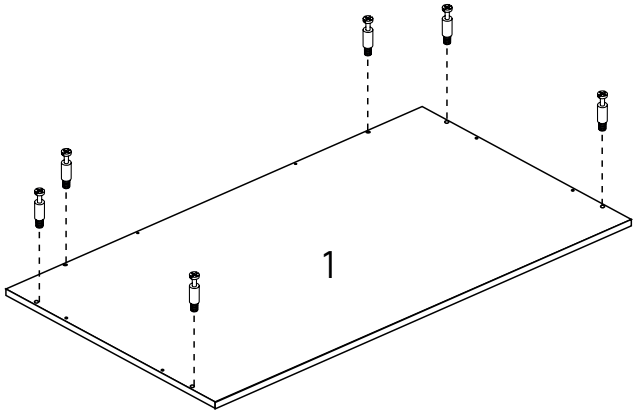

2.

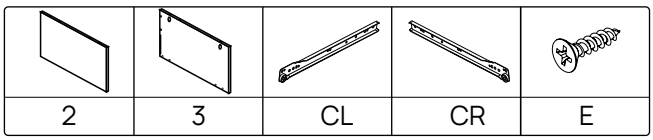

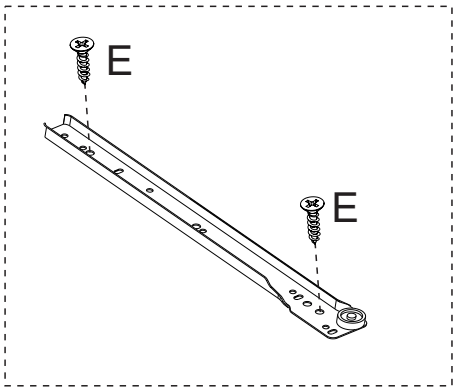

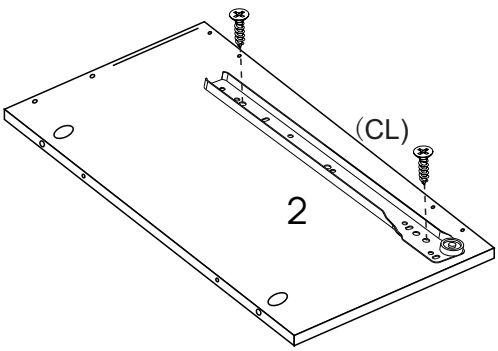

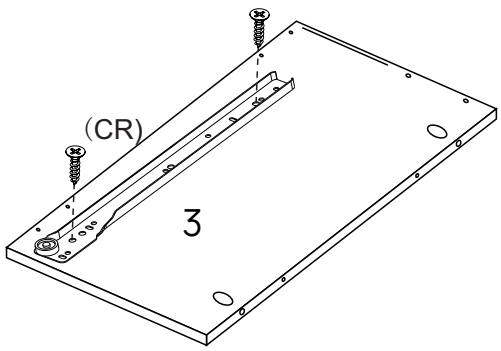

3.

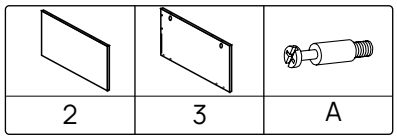

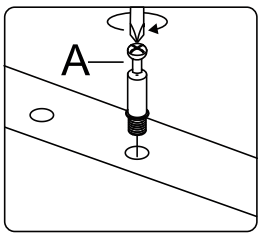

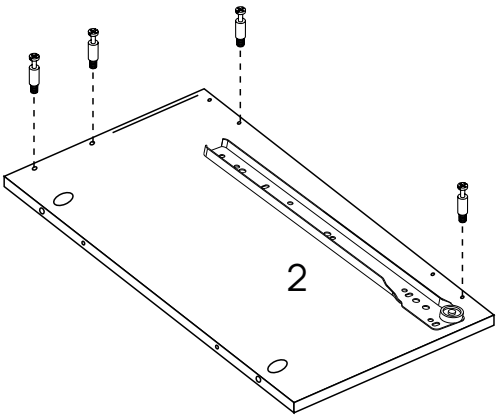

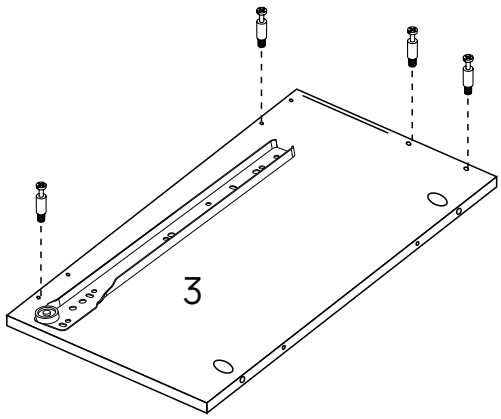

4.

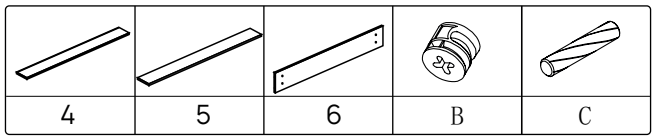

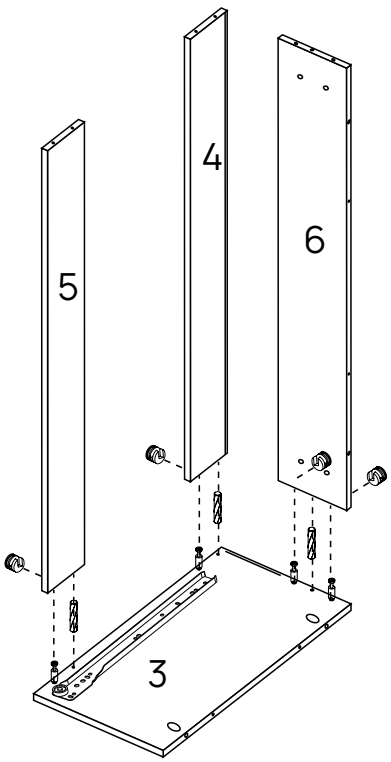

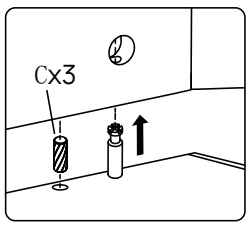

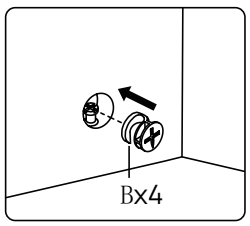

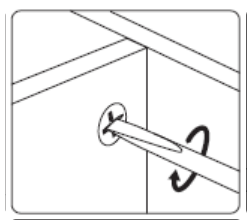

x4

5.

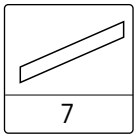

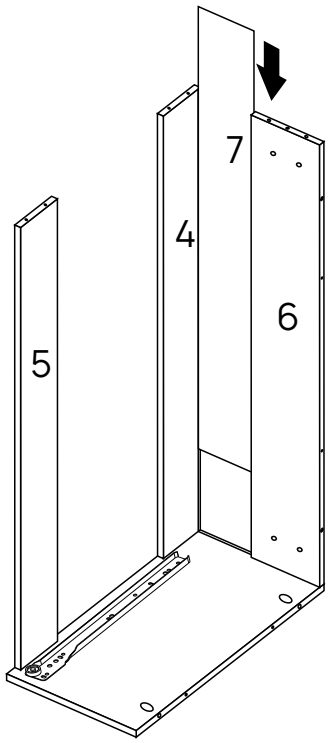

6.

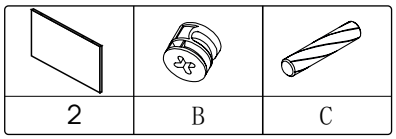

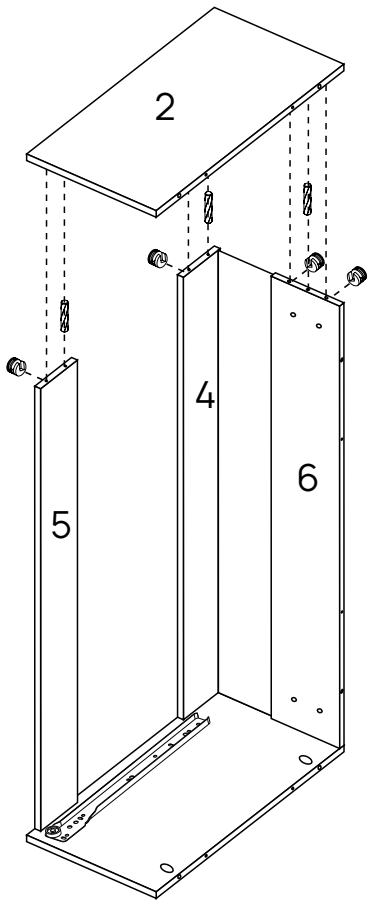

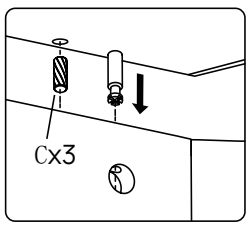

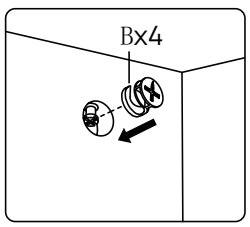

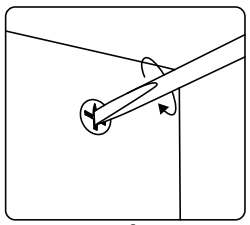

x4

7.

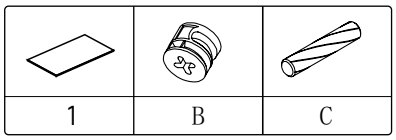

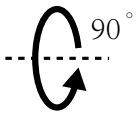

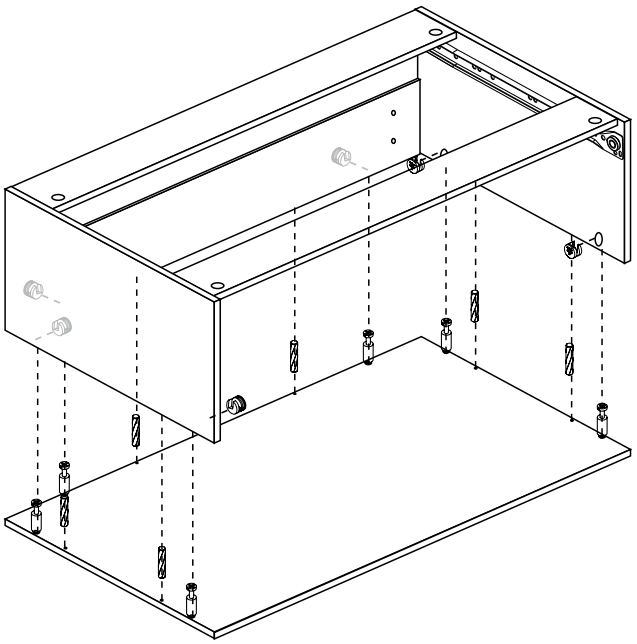

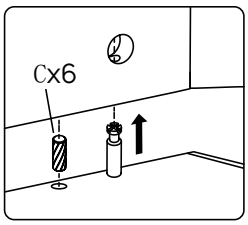

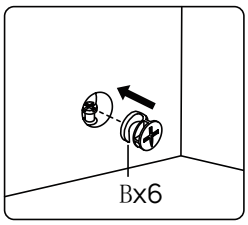

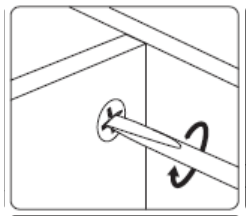

x6

8.

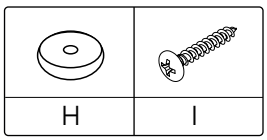

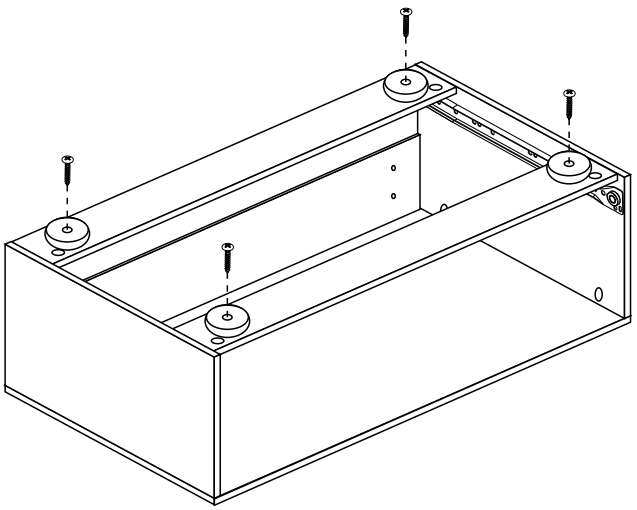

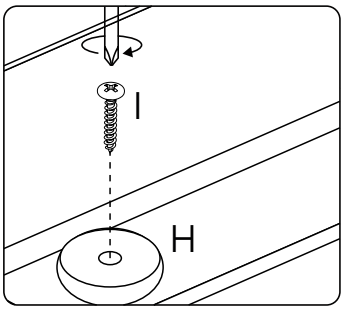

x4

9.

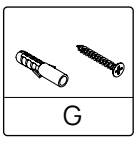

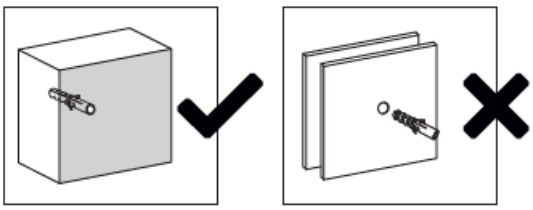

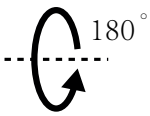

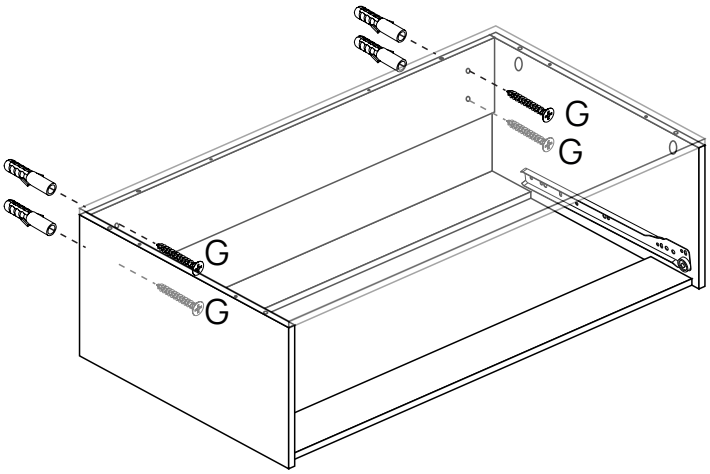

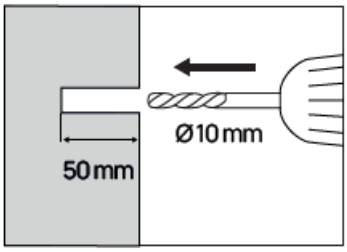

10.

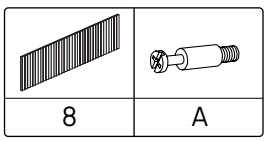

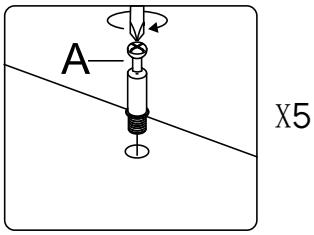

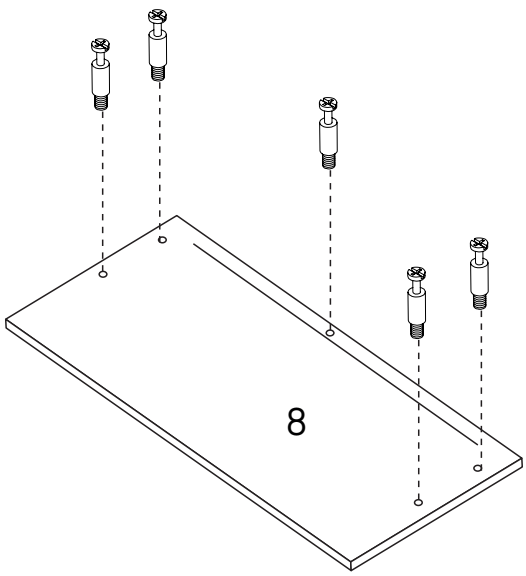

11.

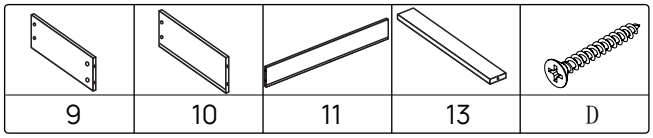

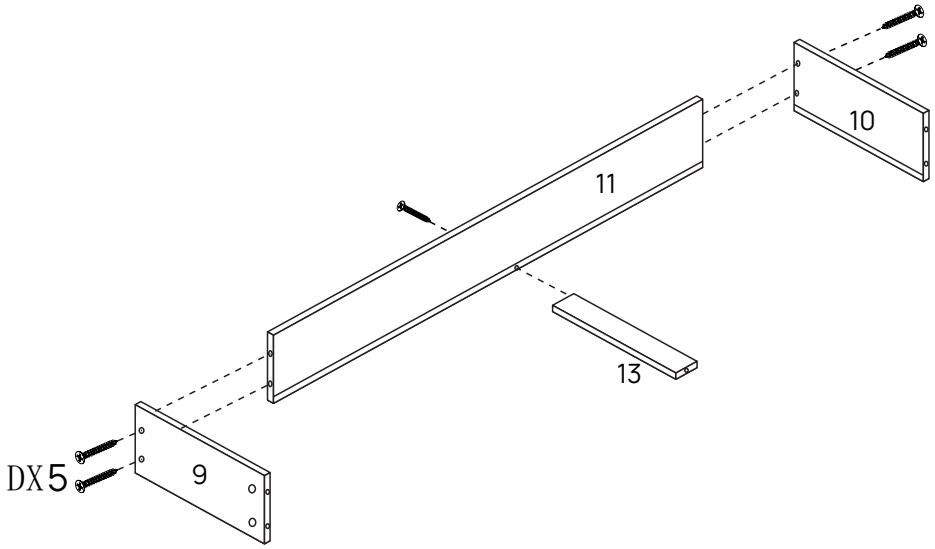

12.

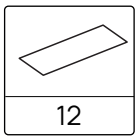

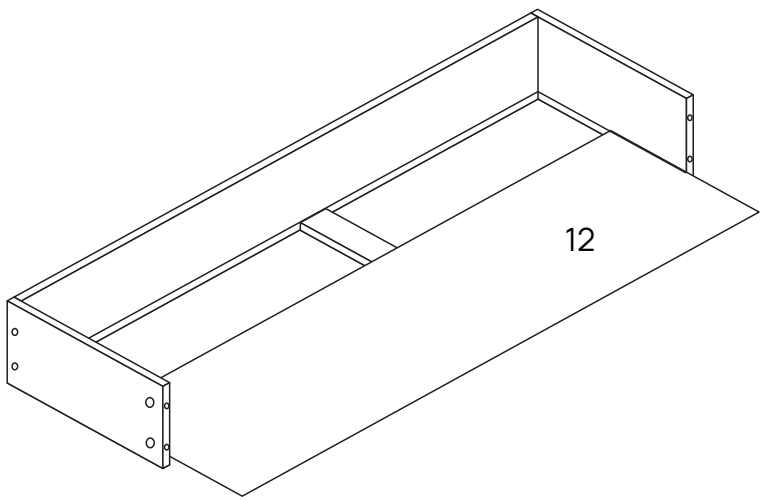

13.

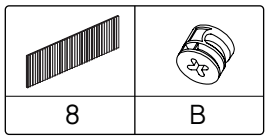

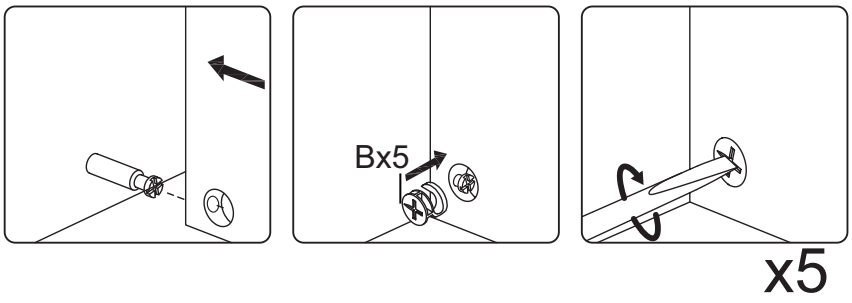

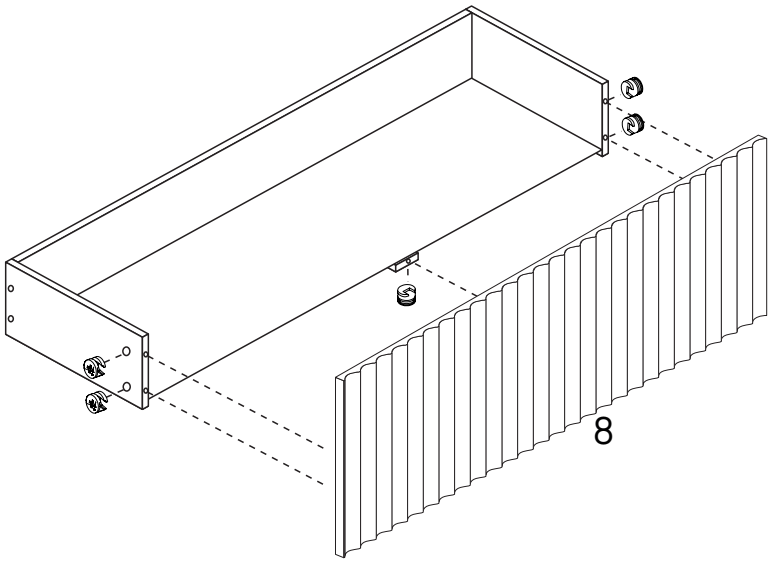

14.

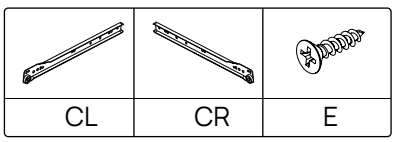

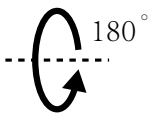

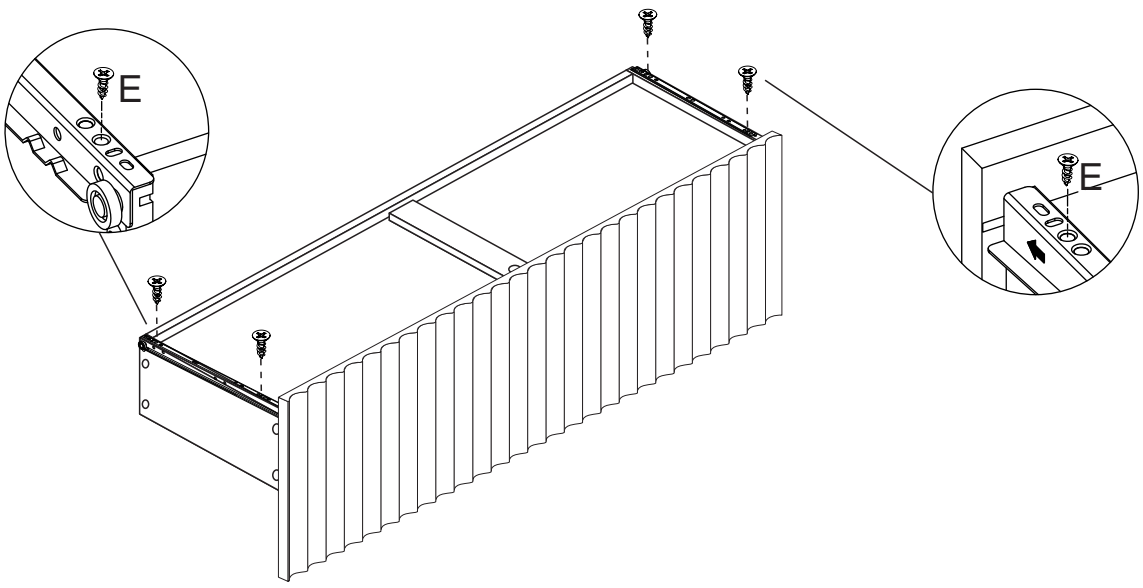

15.

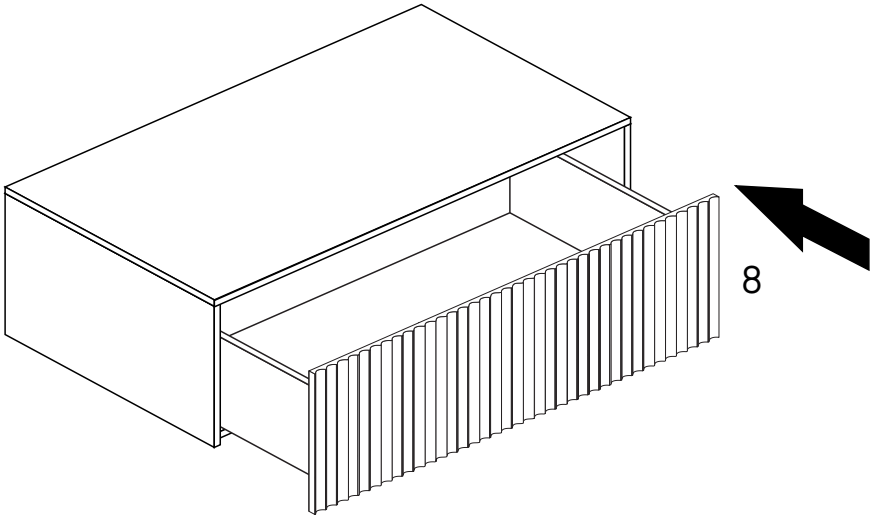

16.

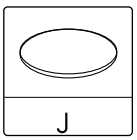

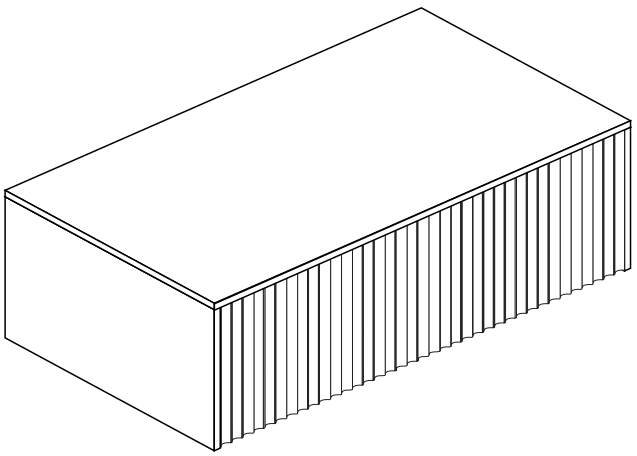

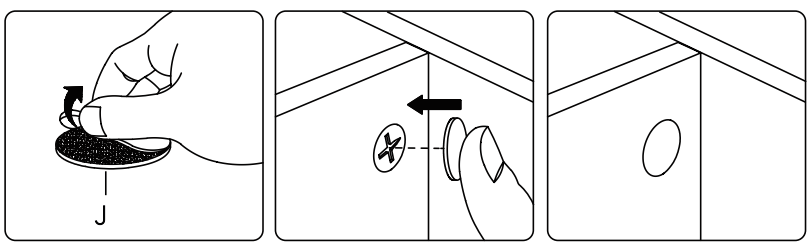

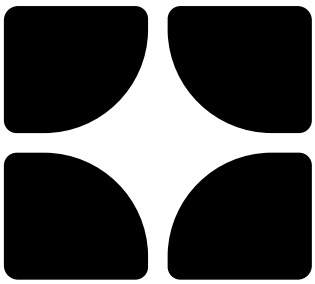

Montez, installez, détendez-vous!

SICAAN.