XANLITE HOME

ECM200PW

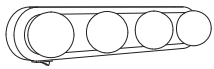

X1



X4

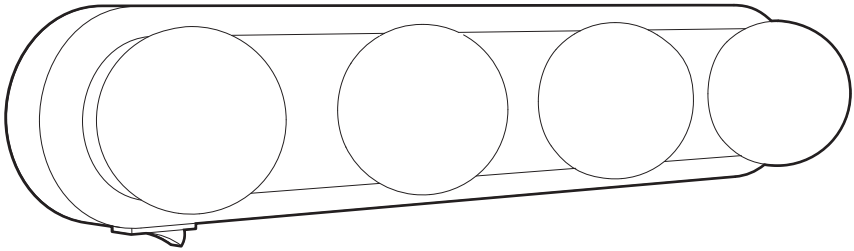

200lm

LED	6500K	IP20	Autonomy 5h	Ta	25°C	Battery 4x 1.5V AA

FR GB ES

PT IT NL

1

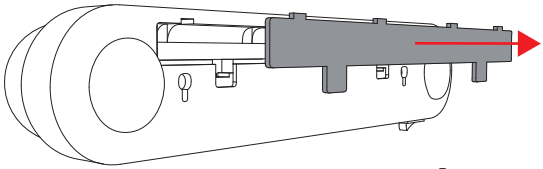

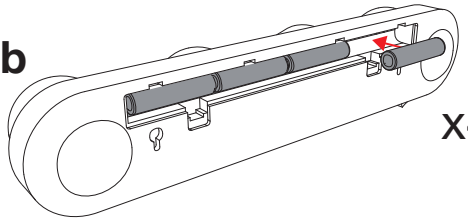

ON/OFF

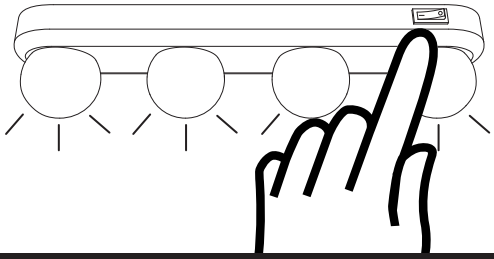

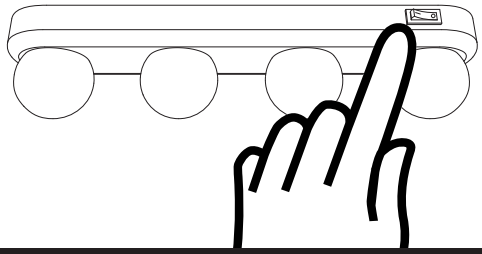

I ON

O OFF

FIXATION A

*non inclus / not included

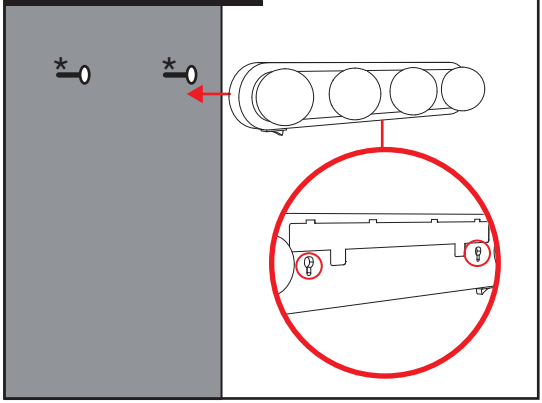

FIXATION B

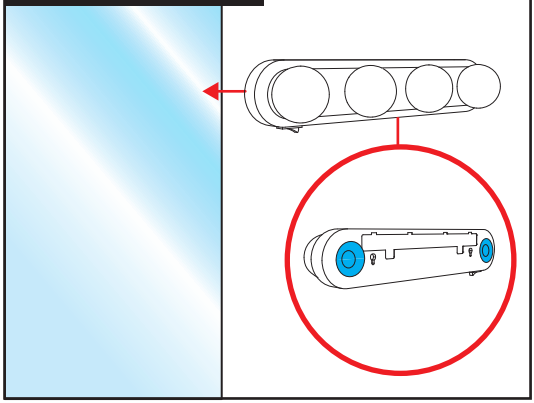

III

V01

XANLITE - Yantec
92 Bd Victor Hugo , 92110 Clichy - France